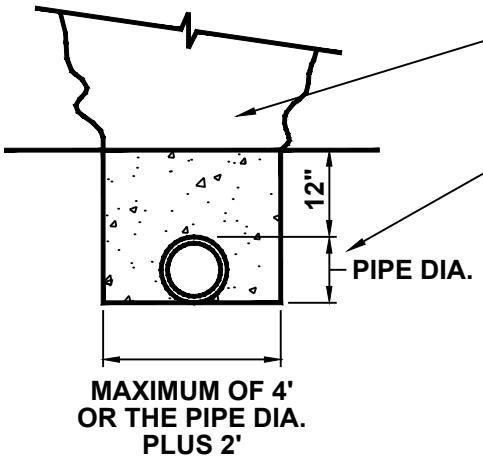

MECHANICALLY COMPACTED BACKFILL MATERIAL IN ACCORDANCE WITH THE CONTRACT SPECIFICATIONS

DUCTILE IRON PIPE ON NON-ROCK TRENCH BOTTOMS. BELL HOLES SHALL BE EXCAVATED TO ASSURE CONTINUOUS PIPE BARREL SUPPORT FOR FULL LENGTH OF PIPE SECTIONS, UNLESS DIRECTED OTHERWISE BY THE CONTRACT SPECIFICATIONS. TRENCH SIDEWALLS SHALL BE PLUMB WITHIN PIPE ZONE.

DETAIL A

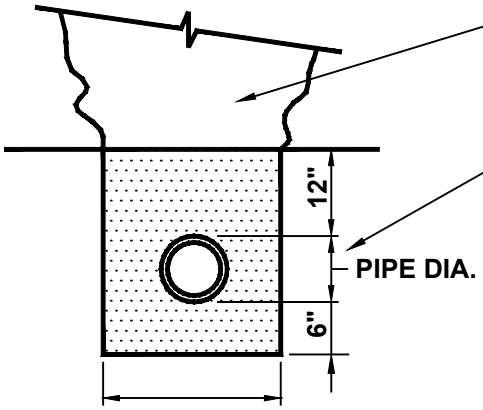

MECHANICALLY COMPACTED BACKFILL MATERIAL IN ACCORDANCE WITH THE CONTRACT SPECIFICATIONS

PVC PIPE AT ALL LOCATIONS. TRENCH SIDEWALLS SHALL BE PLUMB WITHIN PIPE ZONE

DETAIL B

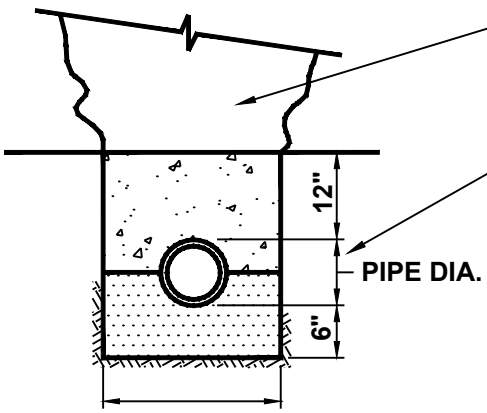

MECHANICALLY COMPACTED BACKFILL MATERIAL IN ACCORDANCE WITH THE CONTRACT SPECIFICATIONS

DUCTILE IRON PIPE ON ROCK TRENCH BOTTOM. TRENCH SIDEWALLS SHALL BE PLUMB WITHIN PIPE ZONE.

SELECTED EXCAVATED MATERIAL MECHANICALLY COMPACTED MAXIMUM SIZE ROCKS- 3"

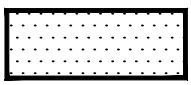

2B CRUSHED LIMESTONE OR CRUSHED GRAVEL.

DETAIL C

MOON TOWNSHIP MUNICIPAL AUTHORITY ALLEGHENY COUNTY PENNSYLVANIA		TRENCH PIPE ZONE DETAIL
Not to scale	April 2016	Standard Detail SD-001

NOTE:

WHERE SELECT BACKFILL IS REQUIRED BETWEEN THE PIPE ZONE AND THE SURFACE MATERIAL, THE PIPE ZONE SHALL EXTEND 12" ABOVE THE PIPE REGARDLESS OF PIPE MATERIAL

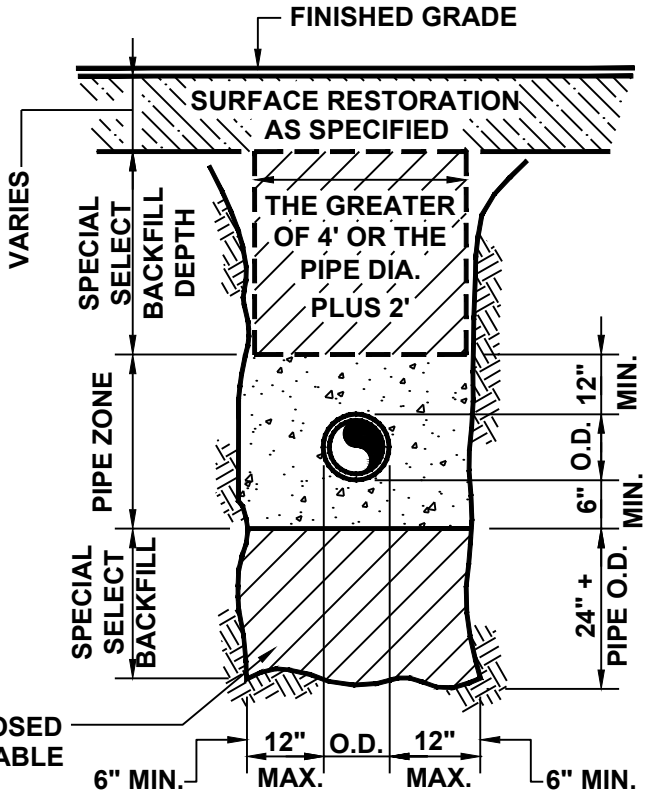

WHERE EXCAVATION EXPOSES THE BOTTOM OF PROPOSED TRENCHES AND REVEALS VERY SOFT OR OTHER UNSTABLE PIPE FOUNDATION MATERIALS , THE CONTRACTOR WILL BE DIRECTED BY MTMA REPRESENTATIVE TO OVERCUT OR STABILIZE/OVERCUT.

SPECIAL BACKFILL DETAIL A

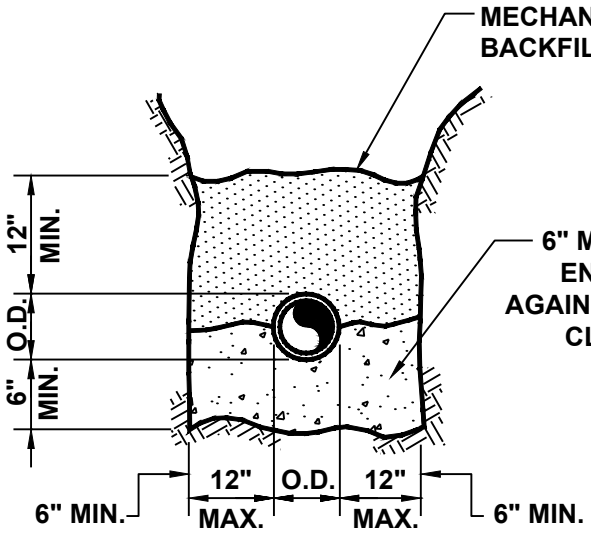

TYPICAL CONCRETE CRADLE DETAIL B

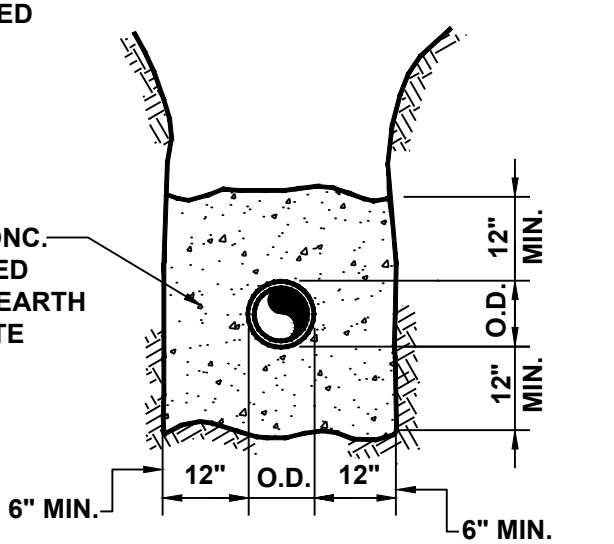

TYPICAL CONCRETE ENCASEMENT FOR DUCTILE IRON PIPE DETAIL C

MOON TOWNSHIP MUNICIPAL AUTHORITY ALLEGHENY COUNTY PENNSYLVANIA		TRENCH DETAILS
Not to scale	April 2016	Standard Detail SD-002

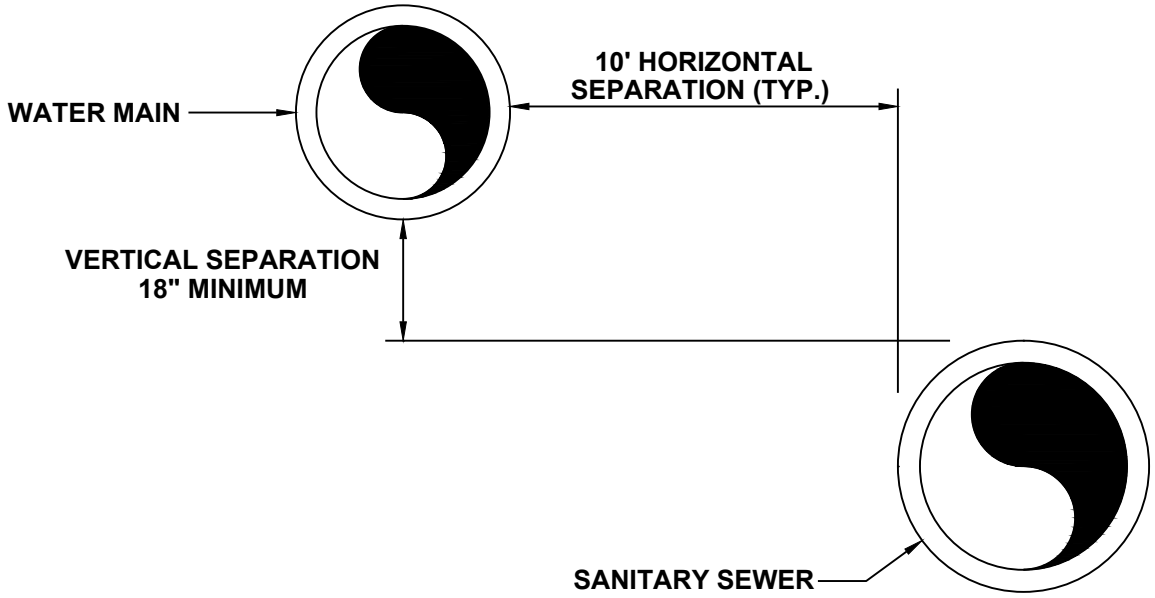

NOTES:

1. WHEN THE HORIZONTAL SEPARATION OF THE WATER MAIN AND SEWER LINE IS LESS THAN 10', THE VERTICAL SEPARATION BETWEEN THE TOP (CROWN) OF THE SEWER LINE O.D. AND THE BOTTOM (INVERT) OF THE WATER MAIN O.D. SHALL BE AT LEAST 18". SEWER LINE SHALL BE ENCASED IN CONCRETE WHERE SEWER/ WATER LINE CROSSINGS OCCUR AND WHERE CONDITIONS PREVENT AN 18" VERTICAL SEPARATION.

2. THERE SHALL BE AT LEAST A 10' HORIZONTAL SEPARATION BETWEEN WATER MAINS AND SANITARY SEWER FORCE MAINS. FORCE MAINS CROSSING WATER MAINS SHALL BE LAID TO PROVIDE A MINIMUM VERTICAL DISTANCE OF 18" BETWEEN THE OUTSIDE OF THE FORCE MAIN AND THE OUTSIDE OF THE WATER MAIN.

MOON TOWNSHIP MUNICIPAL AUTHORITY ALLEGHENY COUNTY PENNSYLVANIA		DESIRED DISTANCES BETWEEN WATER AND SEWER PIPES
Not to scale	April 2016	Standard Detail SD-003

MANHOLE BARREL SHALL BE PRE-CAST CONCRETE ASTM C478 OR GLASS FIBER REINFORCED ASTM D3753. FOR CONNECTING PIPES 18" DIAMETER OR LESS, THE MANHOLE BARREL SHALL BE 4' DIAMETER; WHERE THERE ARE LARGER CONNECTING PIPES OR INSIDE DROP CONNECTIONS, THE DIAMETER SHALL BE 5'.

REFERENCE DETAILS

TOP OF MANHOLE	SD-007
MANHOLE FRAME & COVER	SD-013 OR SD-014
INFLOW PROTECTOR	SD-016
STEPS	SD-017
PIPE CONNECTOR	SD-018 OR SD-019

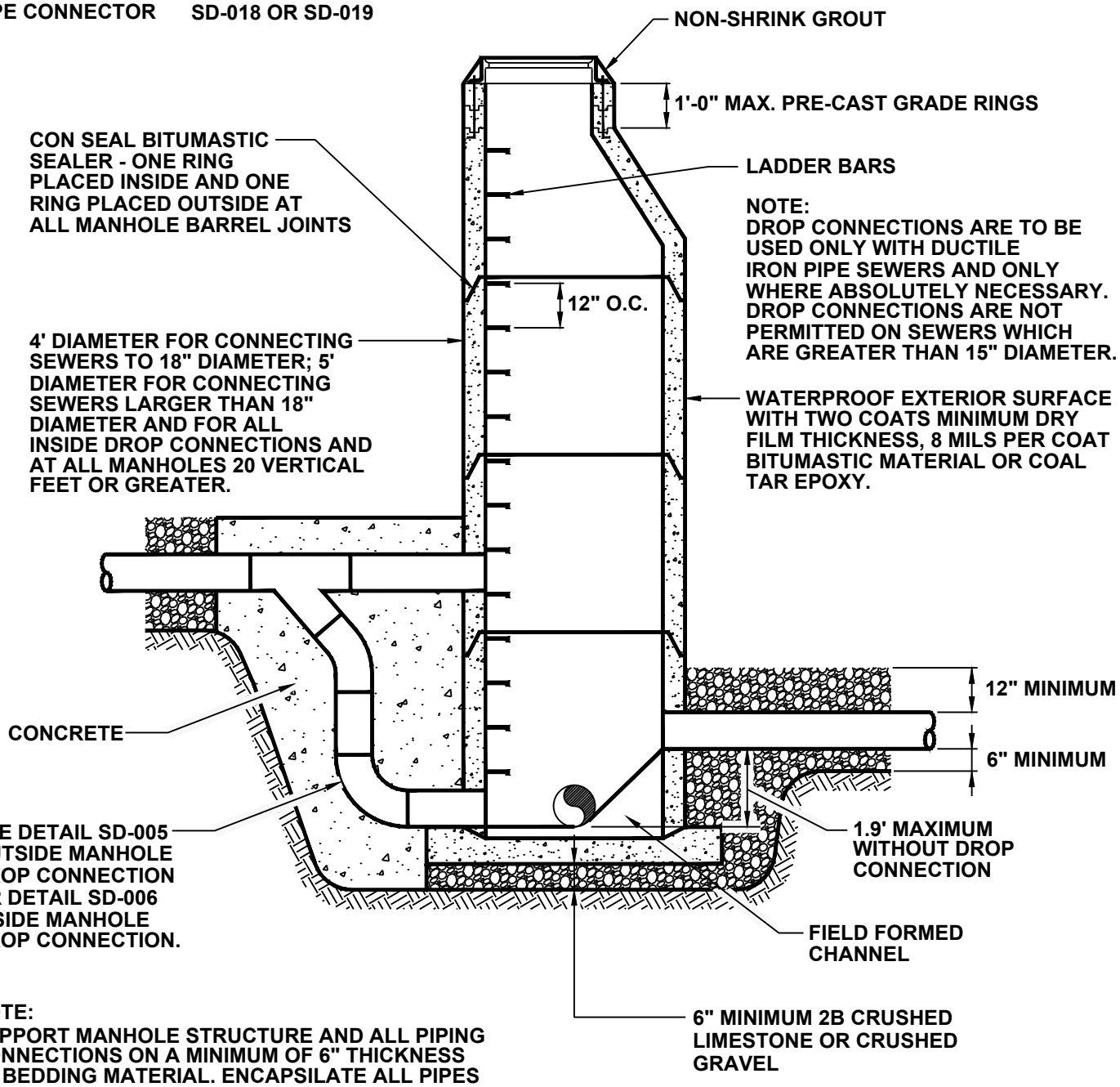

NOTE:
SUPPORT MANHOLE STRUCTURE AND ALL PIPING CONNECTIONS ON A MINIMUM OF 6" THICKNESS 2B BEDDING MATERIAL. ENCAPSILATE ALL PIPES WITHIN MANHOLE EXCAVATION IN THE SAME MATERIAL TO AN ELEVATION OF 12" ABOVE THE TOP OF PIPES. OUTSIDE MANHOLE DROP CONNECTION SHALL BE ENCASED WITH CONCRETE.

MOON TOWNSHIP MUNICIPAL AUTHORITY ALLEGHENY COUNTY PENNSYLVANIA		MANHOLE FOR SEWERS W/ DROP CONNECTION / SPLASH CONNECTION
Not to scale	April 2016	Standard Detail SD-004

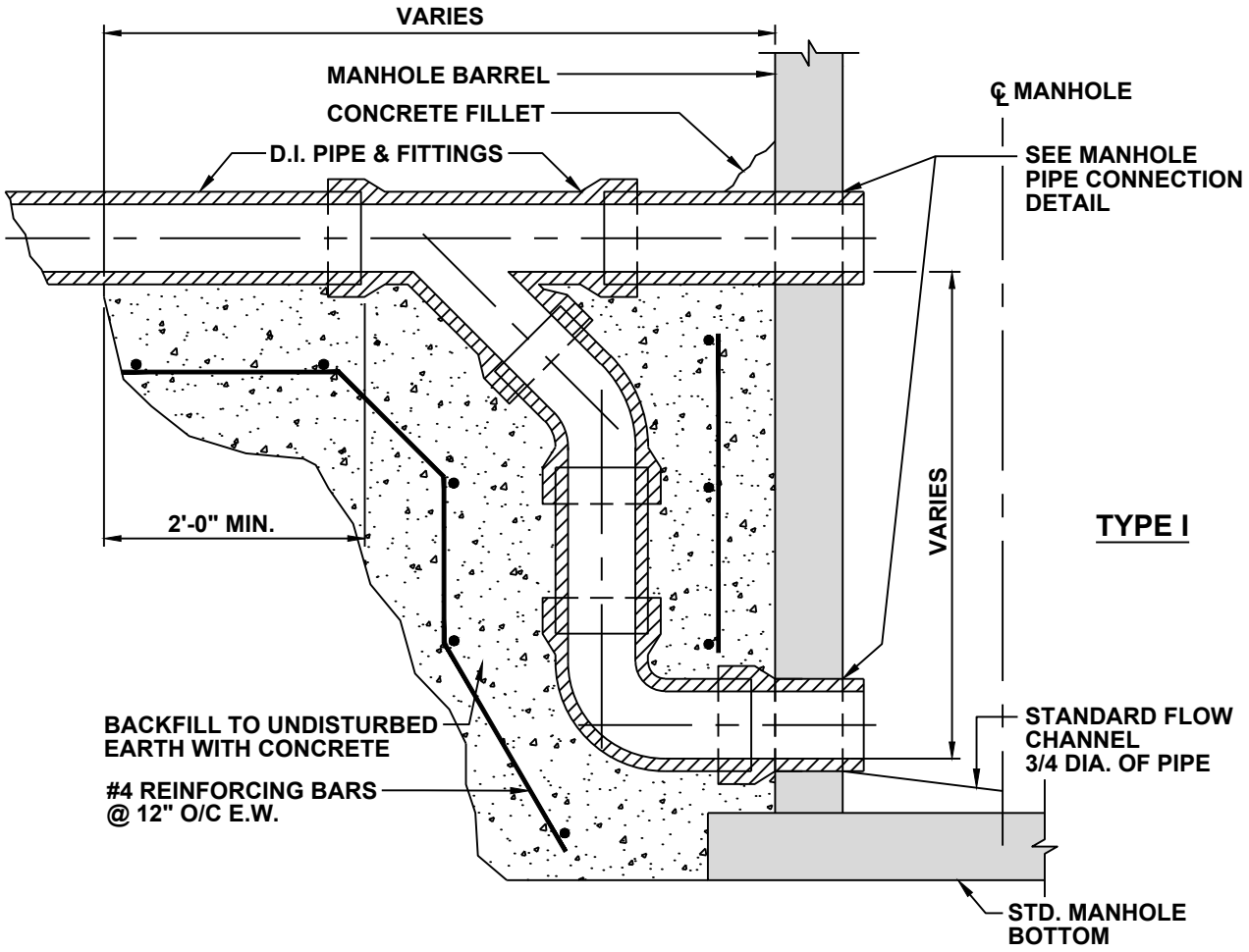

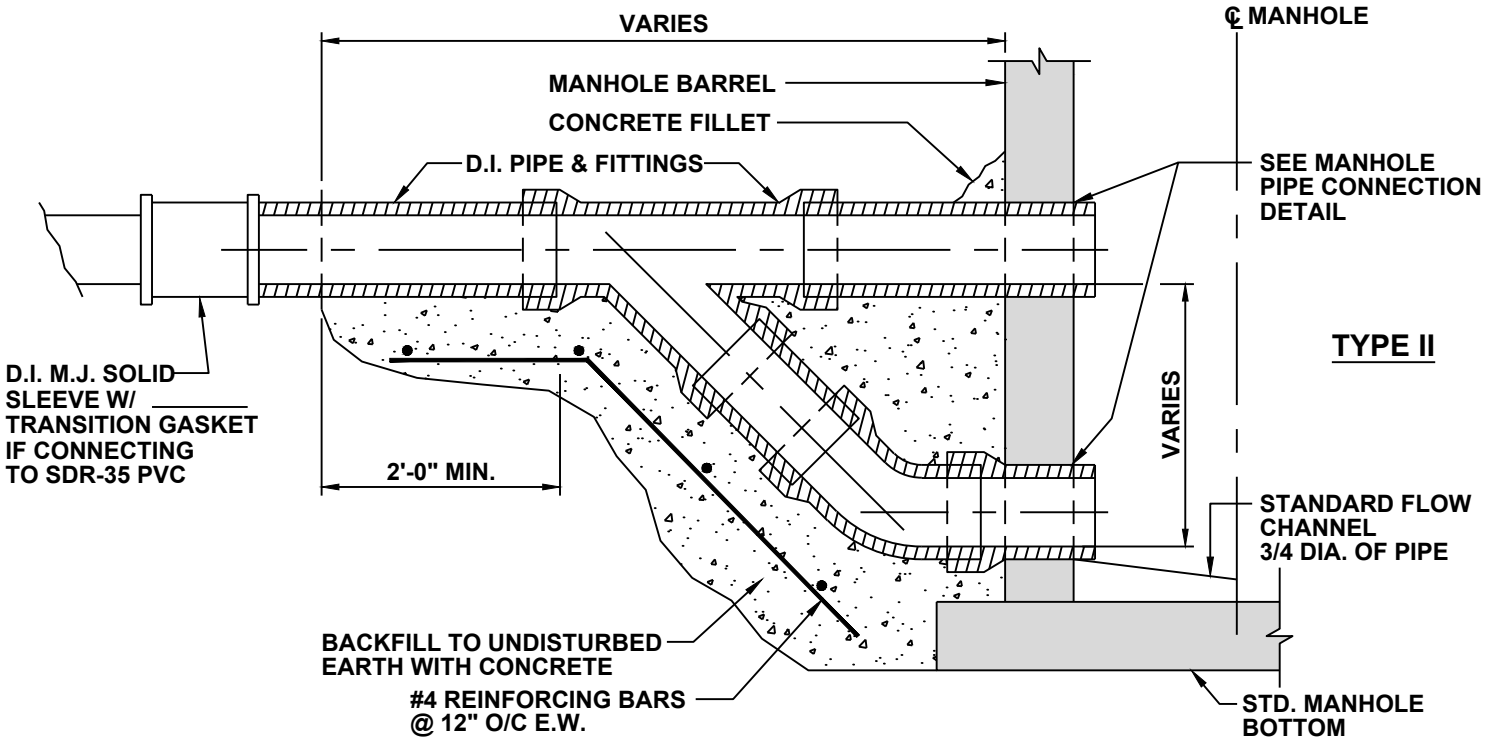

MOON TOWNSHIP MUNICIPAL AUTHORITY ALLEGHENY COUNTY PENNSYLVANIA		OUTSIDE MANHOLE DROP CONNECTION
Not to scale	April 2016	Standard Detail SD-005

NOTES:

1. 5' DIA. PRECAST CONCRETE MANHOLE SECTIONS SHALL CONFORM TO ASTM-C478, LATEST REVISION.
2. WHERE MANHOLE FOUNDATION IS IN ROCK, REINFORCEMENT WILL NOT BE REQUIRED. SHOULD BE MONOLITHIC BASE.
3. LIFTING HOLES SHALL BE PAINTED WITH MORTAR, MADE WATERTIGHT & LEFT NEAT.
4. DROP CONNECTION INLET PIPE TEE AND BENDS SHALL BE PVC PIPE CONFORMING TO ASTM D-3034, SDR-35.
5. FOR FORCE MAINS, INSTALL RUN OF TEE IN VERTICAL POSITION.
6. ALL OTHER MANHOLE STANDARD DETAIL REQUIREMENTS APPLY. SEE SD-008

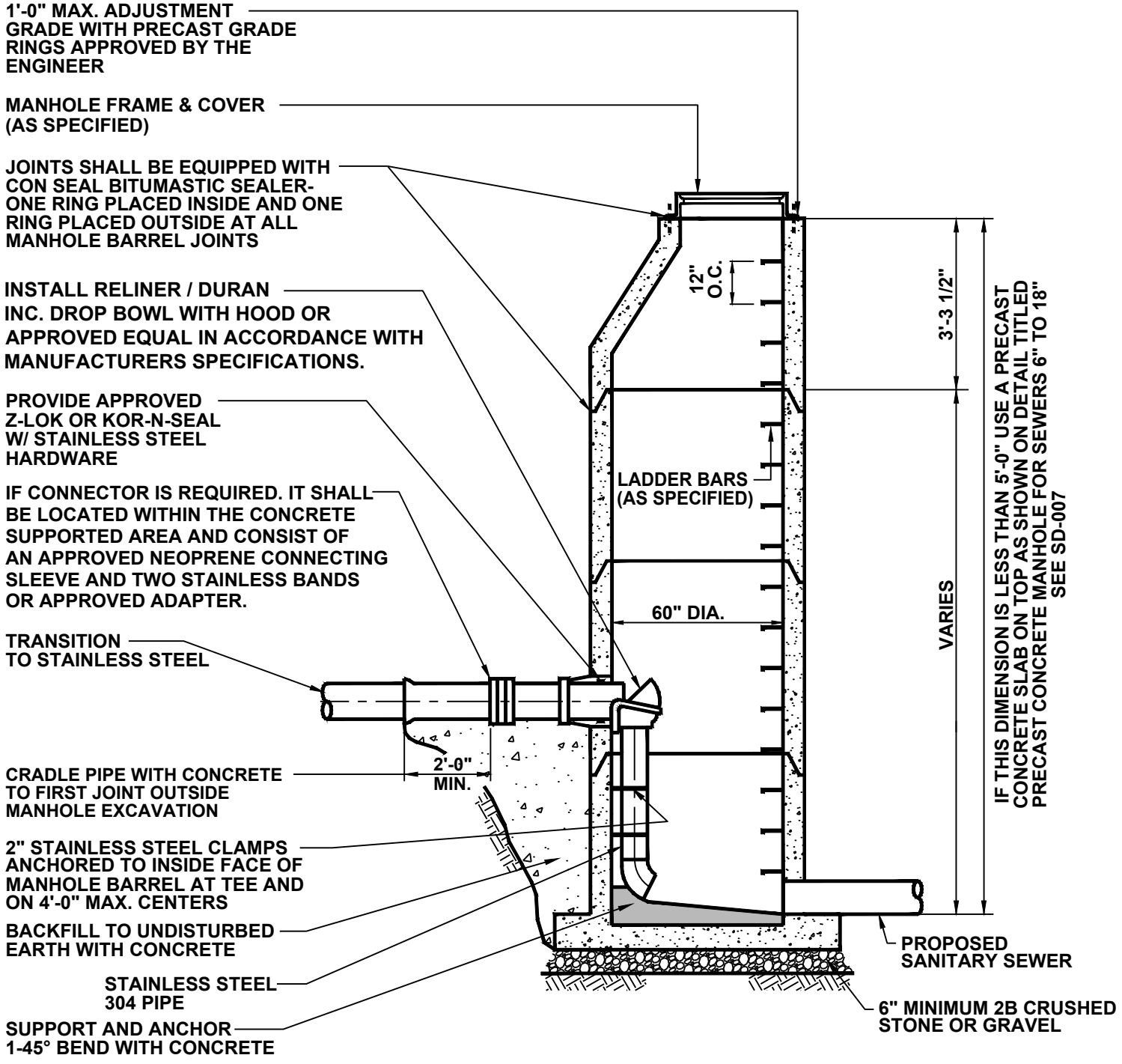

MOON TOWNSHIP MUNICIPAL AUTHORITY ALLEGHENY COUNTY PENNSYLVANIA		INSIDE MANHOLE DROP CONNECTION
Not to scale	April 2016	Standard Detail SD-006

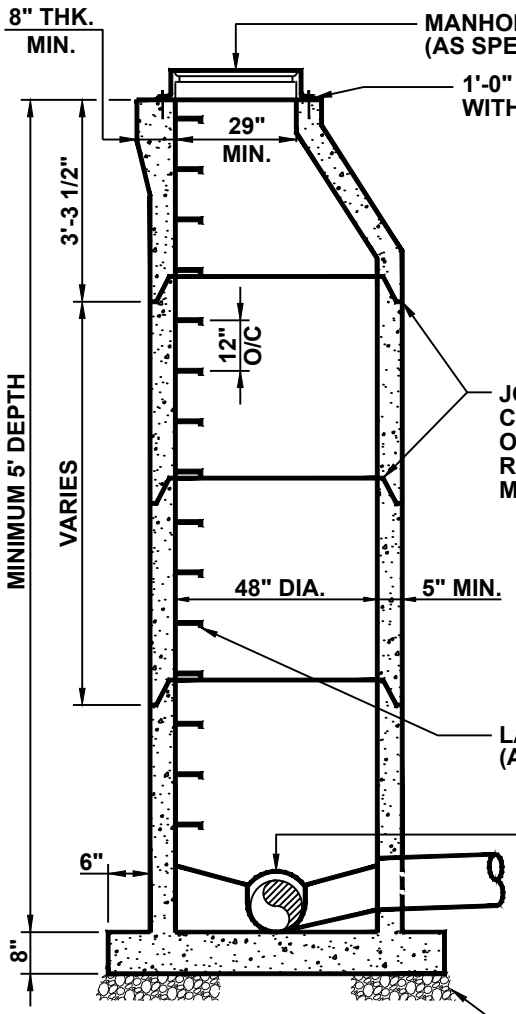

SECTION A-A

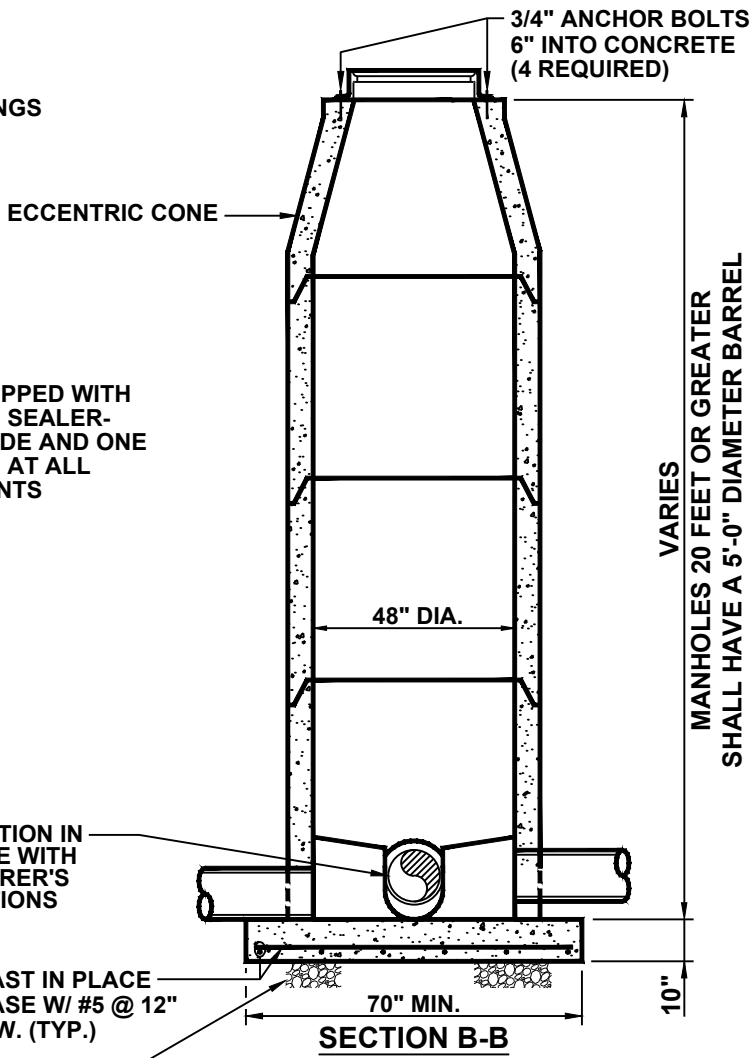

SECTION B-B

NOTES:

1. PRECAST CONCRETE MANHOLE SECTIONS SHALL CONFORM TO ASTM C478, LATEST REVISION.
2. WHERE MANHOLE FOUNDATION IS IN ROCK, REINFORCEMENT WILL NOT BE REQUIRED.
3. MANHOLES EXCEEDING DEPTHS OF 20 FEET SHALL HAVE 60 INCH DIAMETER BARREL.
4. REFERENCE STANDARD DETAIL SD-004.
5. DROP OR SPLASH CONNECTIONS OUTLET INV. EL. 0.25' LOWER THAN INLET INV. EL.
6. CONCRETE SHALL BE 4,000 PSI.
7. PIPES SHALL BE EXTENDED 3" INSIDE FACE OF MANHOLE.
8. WATERPROOF EXTERIOR SURFACE WITH TWO COATS BITUMASTIC MATERIAL OR COAL TAR EPOXY. MIN. DRY FILM THICKNESS, 8 MILS PER COAT.

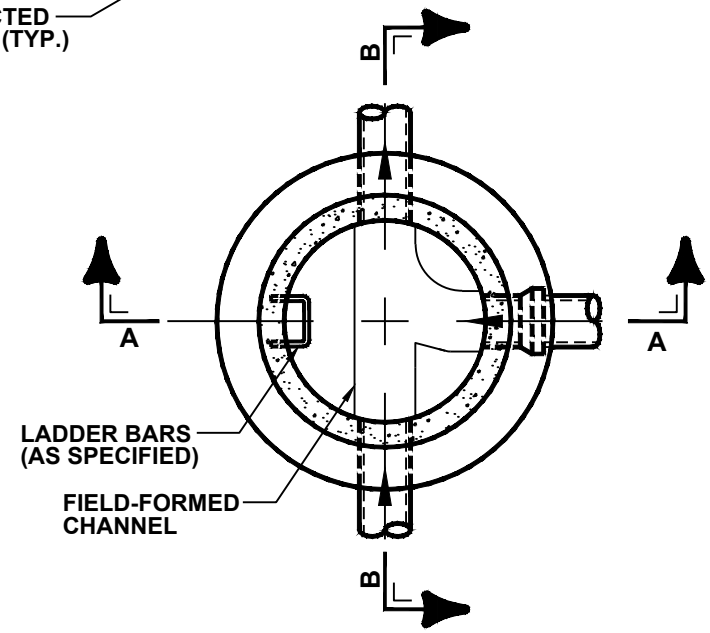

SECTIONAL PLAN C

MOON TOWNSHIP MUNICIPAL AUTHORITY ALLEGHENY COUNTY PENNSYLVANIA		PRECAST CONCRETE MANHOLE FOR SEWERS 6" TO 18"
Not to scale	April 2016	Standard Detail SD-007

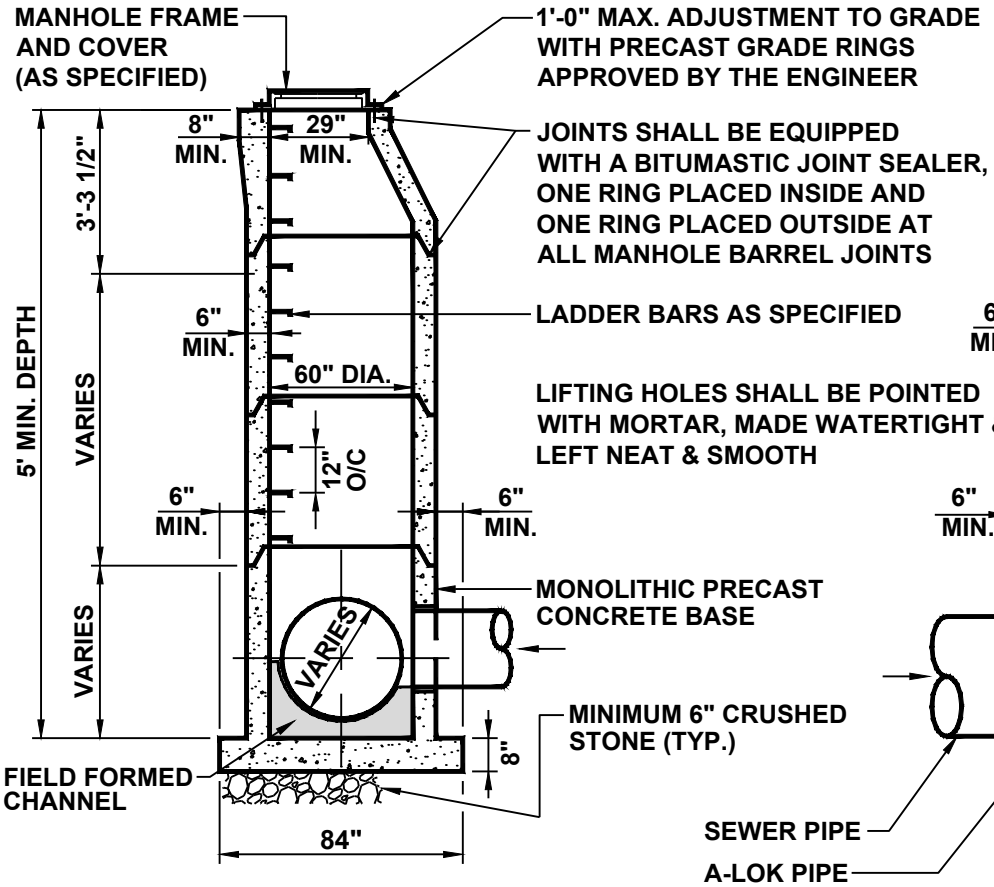

SECTION B-B

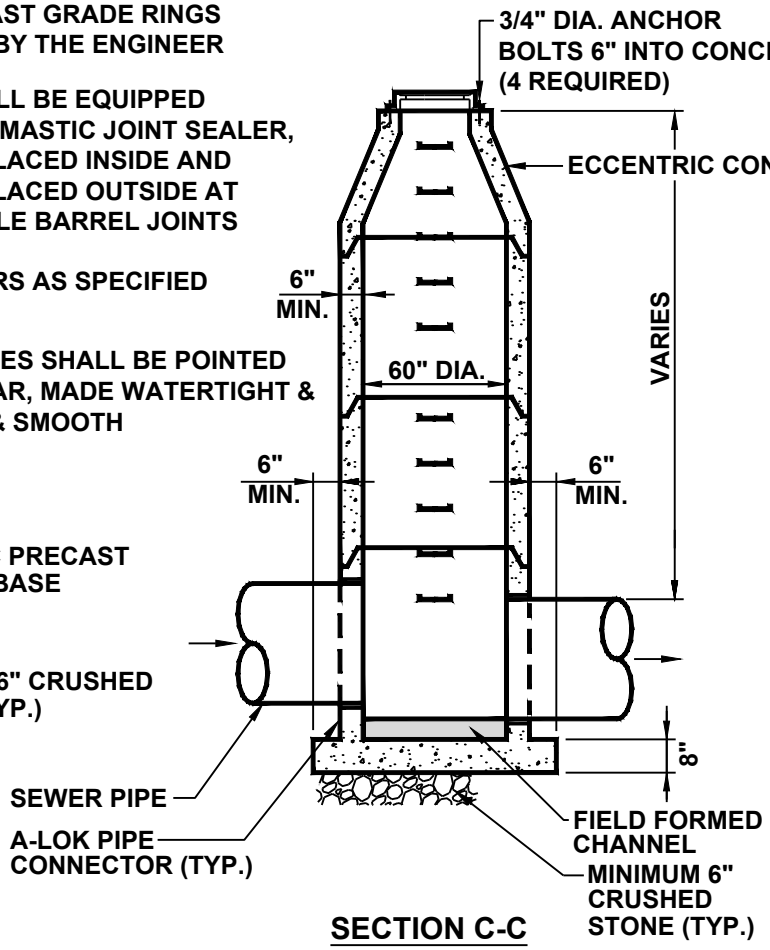

SECTION C-C

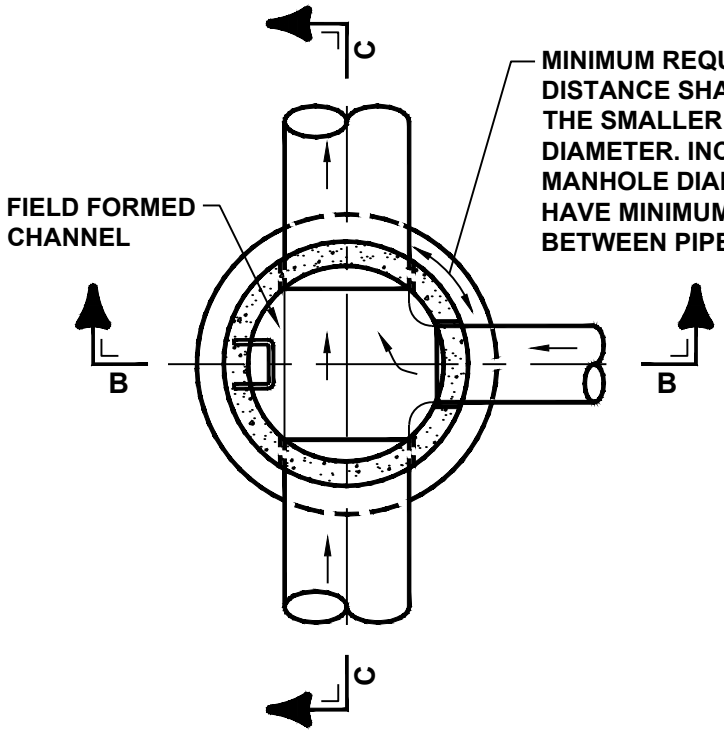

PLAN A-A

NOTES:

1. PRECAST CONCRETE MANHOLE SECTIONS SHALL CONFORM TO ASTM C478, LATEST REVISION.
2. WATERPROOF EXTERIOR SURFACE WITH TWO COATS BITUMASTIC MATERIAL OR COAL TAR SOLUTION. 8 MILS PER COAT.
3. MINIMUM MH DEPTH IS 5'-0" MANHOLE TO BE 60" DIA. FULL DEPTH.
4. REFERENCE STANDARD DETAIL SD-004.
5. DROP OR SPLASH CONNECTIONS OUTLET INV. EL. 0.25' LOWER THAN INLET INV. EL.
6. CONCRETE SHALL BE 4,000 PSI.
7. PIPES SHALL BE EXTENDED 3" INSIDE FACE OF MANHOLE.

MOON TOWNSHIP MUNICIPAL AUTHORITY ALLEGHENY COUNTY PENNSYLVANIA		PRECAST CONCRETE MANHOLE (60" DIAMETER) (PIPE DIAMETER- 20" TO 30")
Not to scale	April 2016	Standard Detail SD-008

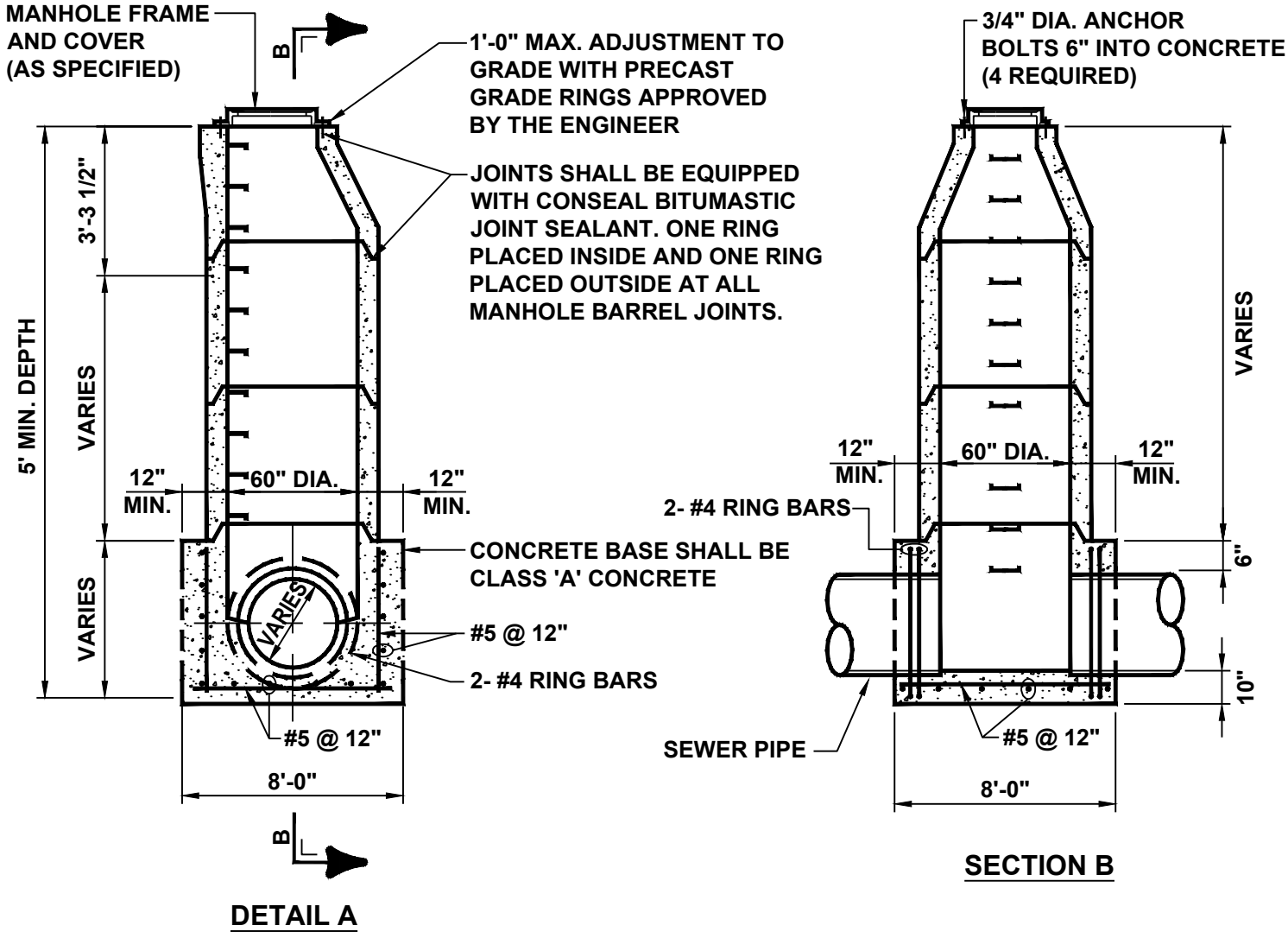

NOTES:

1. PRECAST CONCRETE MANHOLE SECTIONS SHALL CONFORM TO ASTM C-478, LATEST REVISION.
2. WHERE MANHOLE FOUNDATION IS IN ROCK, REINFORCEMENT WILL NOT BE REQUIRED.
3. WATERPROOF EXTERIOR SURFACE WITH TWO COATS BITUMASTIC MATERIAL OR COAL TAR EPOXY. 8 MILS PER COAT.

MOON TOWNSHIP MUNICIPAL AUTHORITY ALLEGHENY COUNTY PENNSYLVANIA		PRECAST CONCRETE MANHOLE FOR SEWERS 20" TO 30" (CAST-IN-PLACE BOTTOM)
Not to scale	April 2016	Standard Detail SD-009

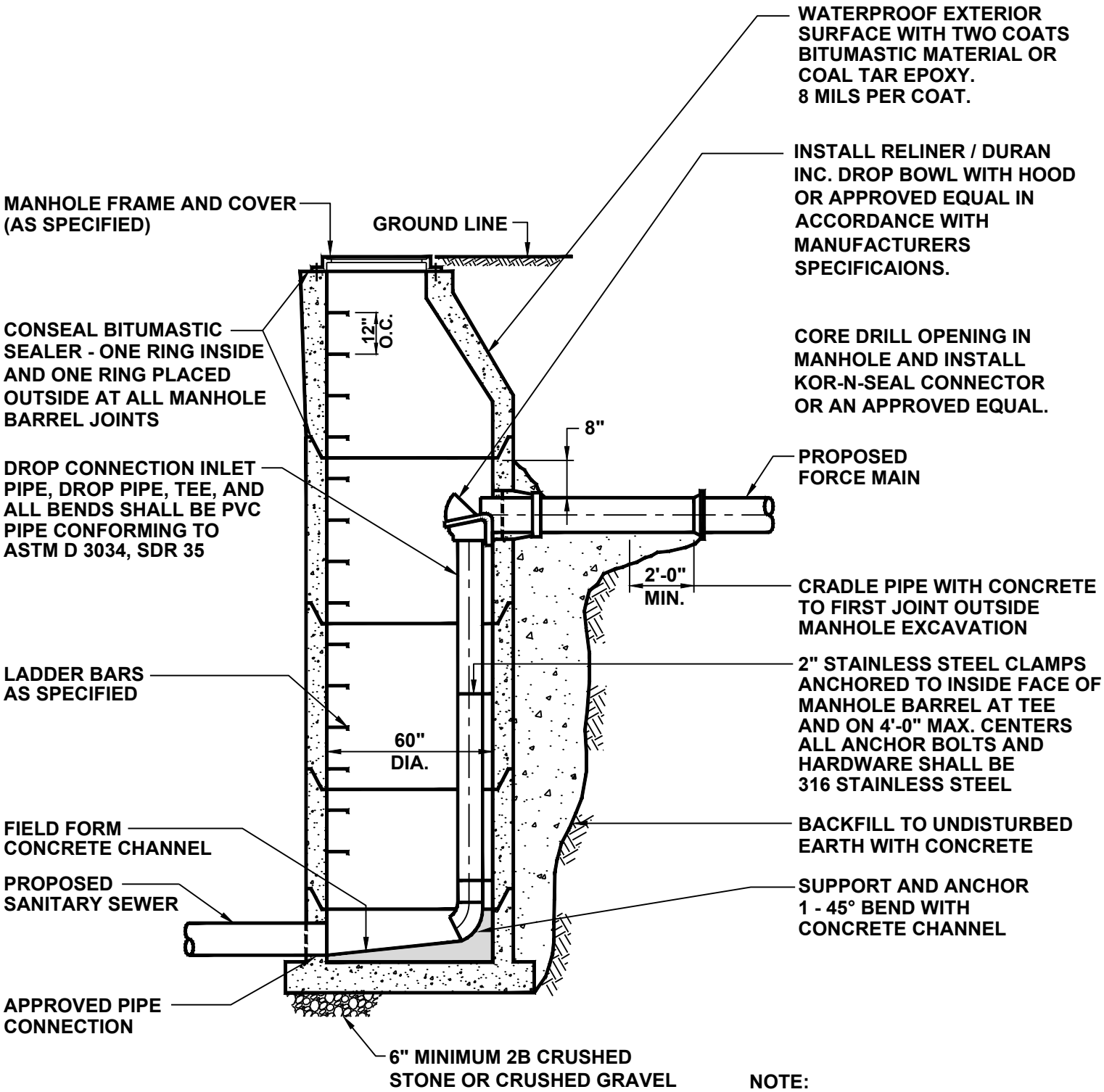

NOTE:

DROP CONNECTION INLET PIPE, DROP PIPE, TEE AND ALL BENDS SHALL BE STAINLESS STEEL SCHEDULE 40 304 S.S.

MOON TOWNSHIP MUNICIPAL AUTHORITY ALLEGHENY COUNTY PENNSYLVANIA		CONNECTION OF FORCE MAIN TO GRAVITY MANHOLE
Not to scale	April 2016	Standard Detail SD-010

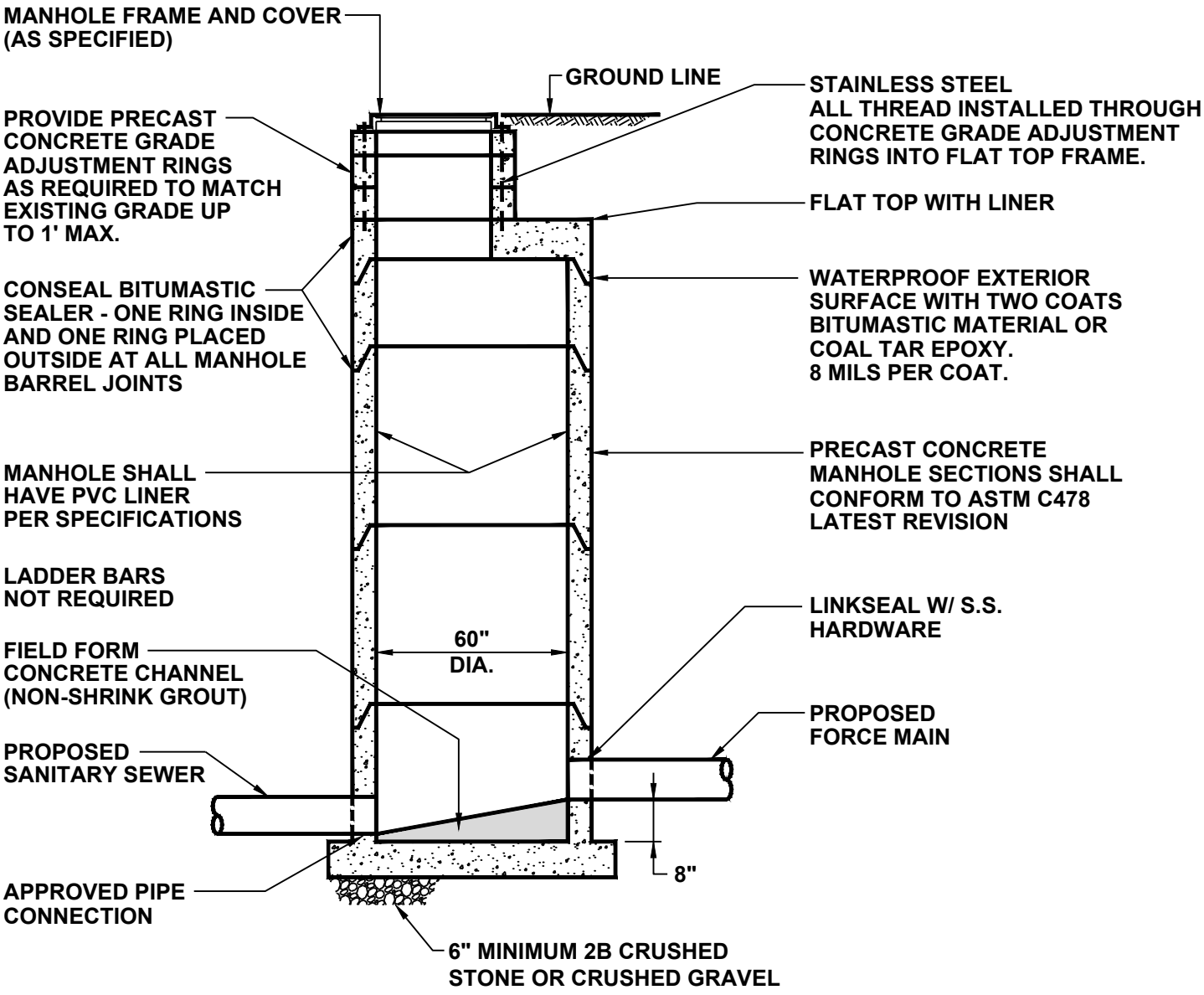

MOON TOWNSHIP MUNICIPAL AUTHORITY ALLEGHENY COUNTY PENNSYLVANIA		CONNECTIONS OF FORCE MAIN TO GRAVITY MANHOLE WITH PVC LINER
Not to scale	April 2016	Standard Detail SD-011

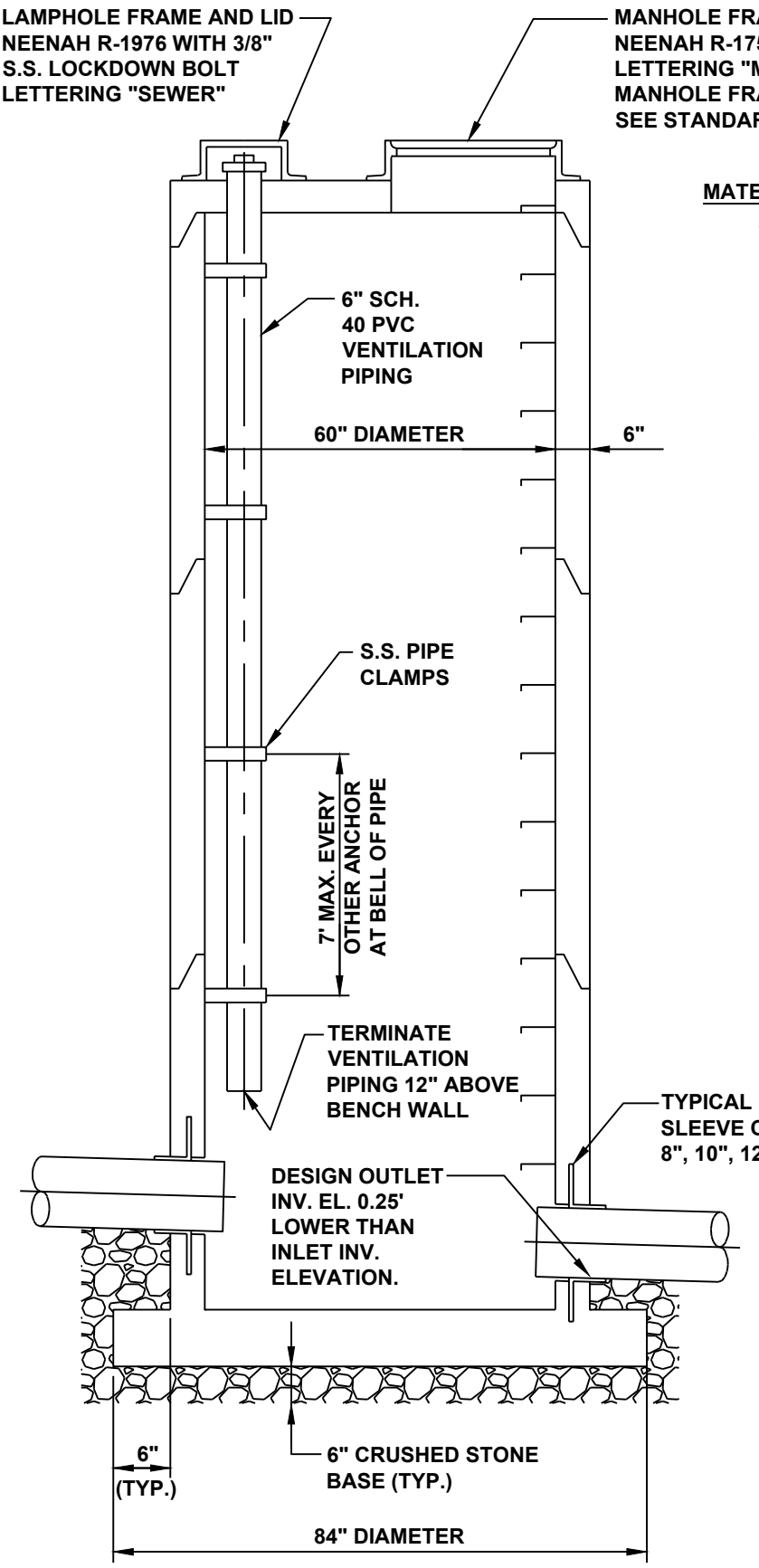

SECTION

MATERIALS:

1. 1" x 1/2" 304 STAINLESS STEEL BARSTOCK IN U-SHAPED BRACKET SIZED FOR 4" SCHEDULE 40 PVC PIPE WITH PREDRILLED BOLT HOLES ON BRACKET WINGS.
2. STAINLESS STEEL CINCH ANCHORS
3. 1/2" STAINLESS STEEL BOLTS

SUPPLIER:

CORAOPOLIS LIGHT METAL, INC.
1221 THIRD AVENUE
CORAOPOLIS, PA. 15108
(412) 264-2252 OR MACHINE SHOP
OF CONTRACTORS CHOICE.

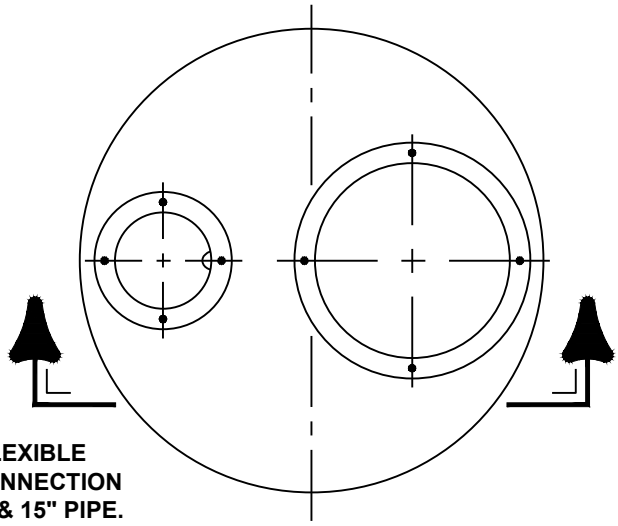

MANHOLE TOP PLAN

PRECAST CONCRETE MANHOLES MEET OR EXCEED THE A.S.T.M. C 478 SPECIFICATIONS FOR PRECAST REINFORCED CONCRETE MANHOLE RISERS AND TOPS.

CONCRETE STANDARD SPECIFICATIONS
CONCRETE - 4000 P.S.I.

MOON TOWNSHIP MUNICIPAL AUTHORITY ALLEGHENY COUNTY PENNSYLVANIA		MANHOLE VENTILATION PIPE DETAIL
Not to scale	April 2016	Standard Detail SD-012

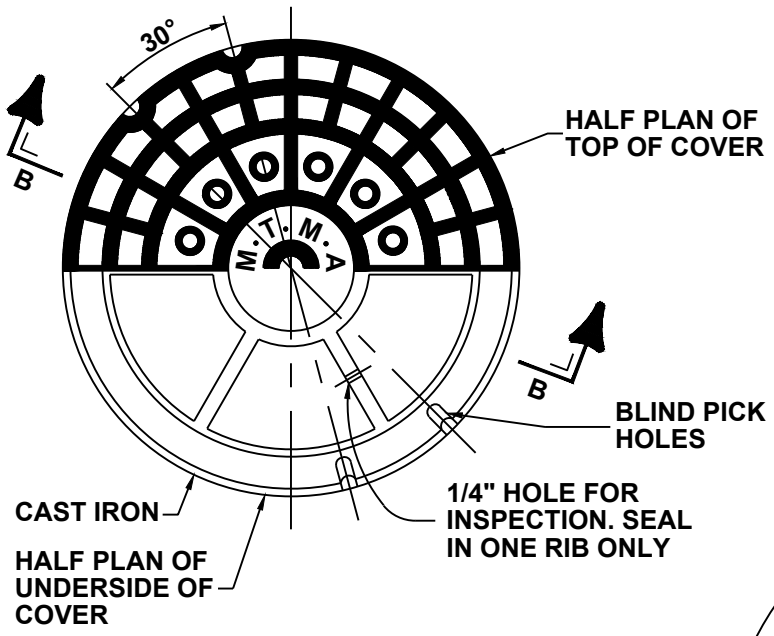

COVER PLAN A

SHADED PORTION - HIGH
PLAIN PORTION - LOW

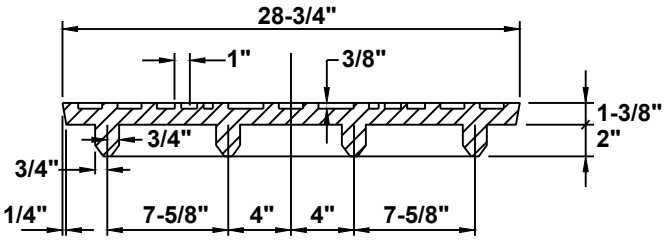

COVER SECTION B-B

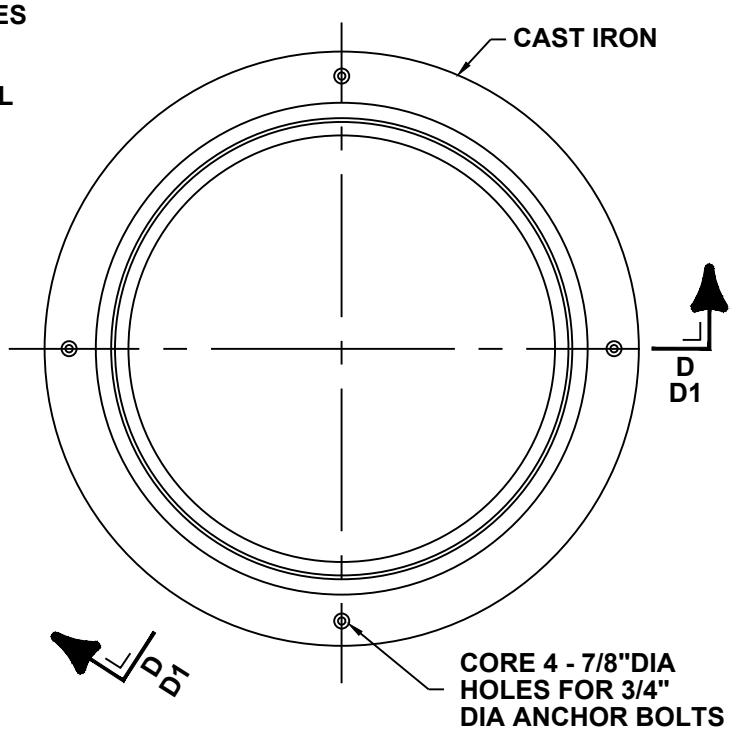

FRAME PLAN C

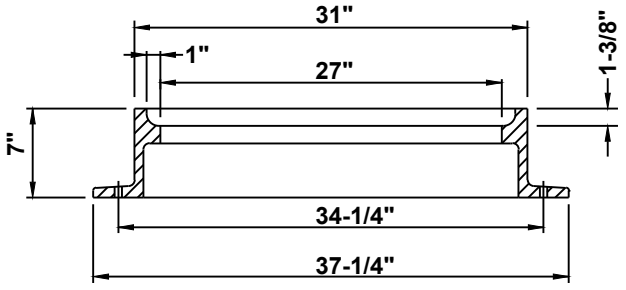

BOTTOM FLANGE - SECTION D-D

NOTE:

FRAME AND COVER TO BE 'NEENAH R-1753' WITH SELF-SEALING LID OR APPROVED EQUAL.
'MTMA SANITARY' TO BE CAST IN CIRCLE IN CENTER OF COVER AS ORDERED.

MOON TOWNSHIP MUNICIPAL AUTHORITY ALLEGHENY COUNTY PENNSYLVANIA		STANDARD CAST IRON MANHOLE FRAME AND COVER
Not to scale	April 2016	Standard Detail SD-013

NOTE:

FRAME AND COVER SHALL BE 'NEENAH R-1755-F2' COMPLETE WITH NEOPRENE GASKET, BRONZE TIGHTENING BOLT AND CHANNEL LOCKING BAR OR APPROVED EQUAL.

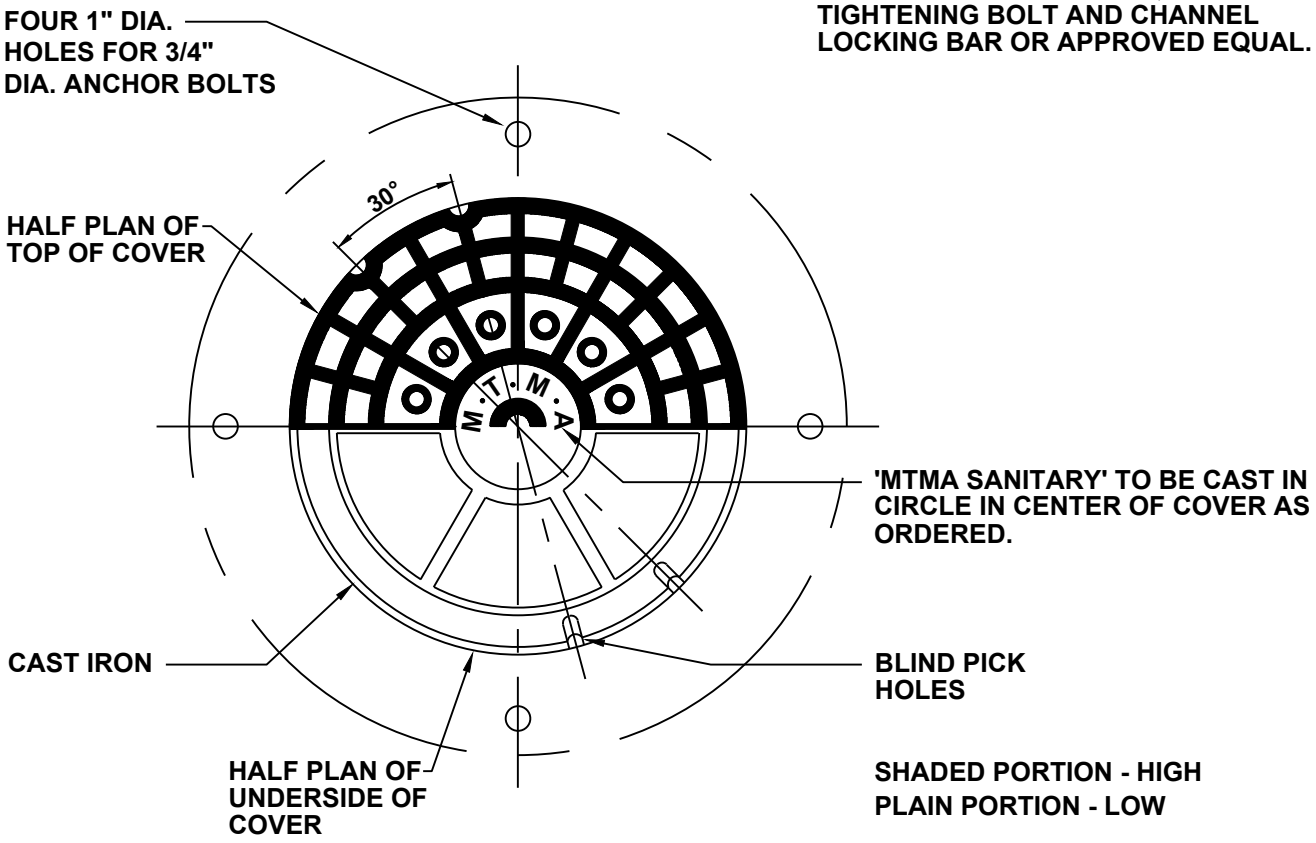

PLAN

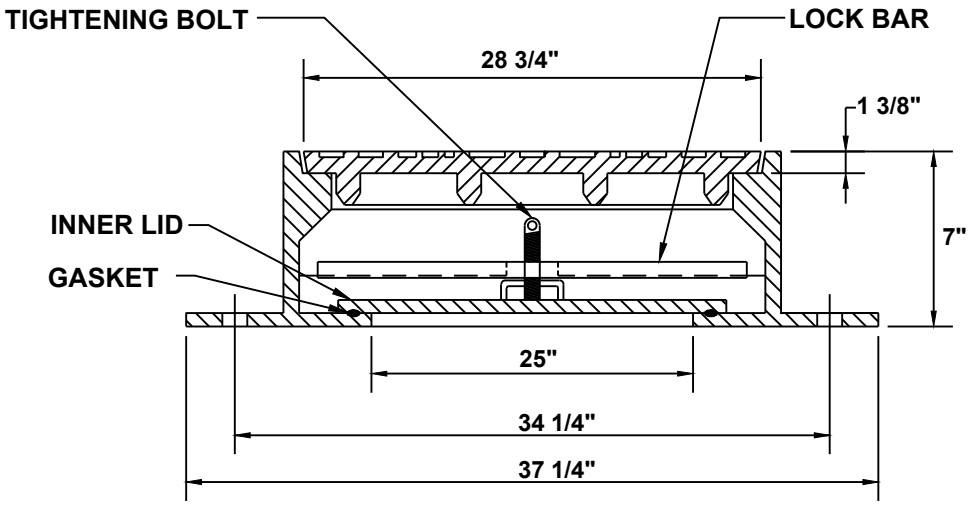

SECTION

MOON TOWNSHIP MUNICIPAL AUTHORITY ALLEGHENY COUNTY PENNSYLVANIA		WATERTIGHT MANHOLE (WT) FRAME AND COVER
Not to scale	April 2016	Standard Detail SD-014

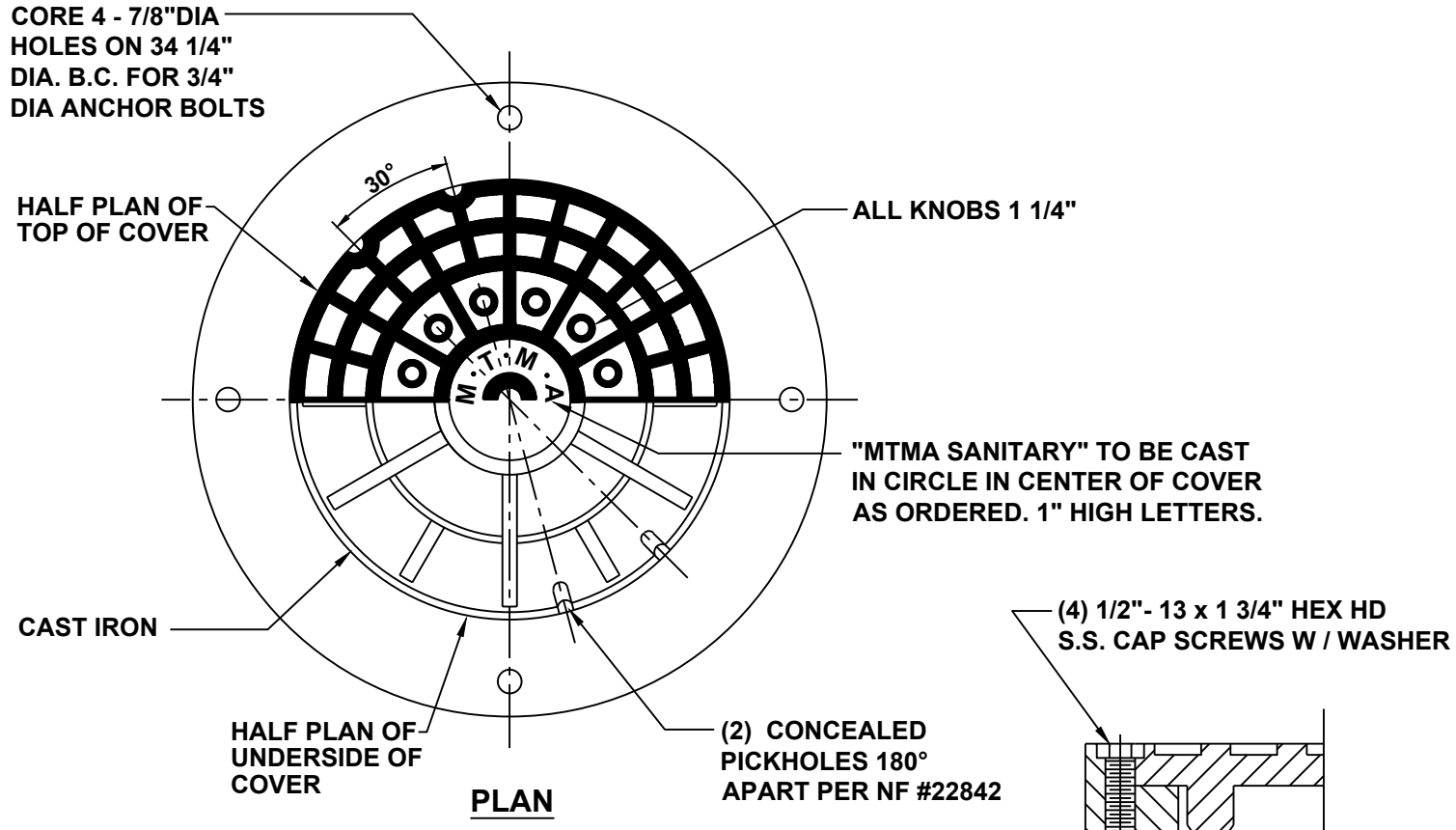

PLAN

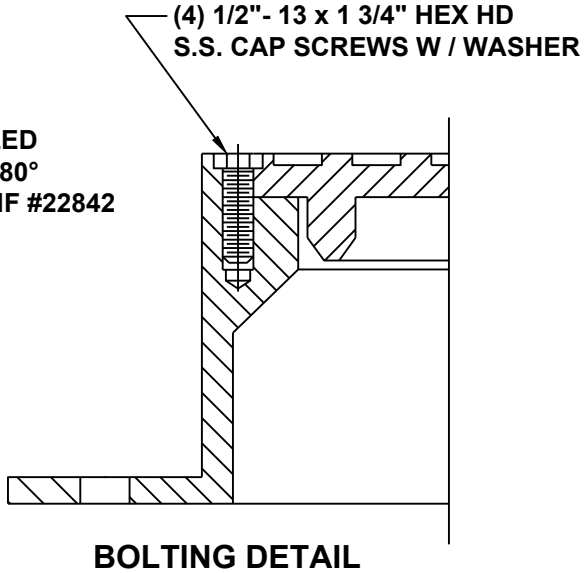

BOLTING DETAIL

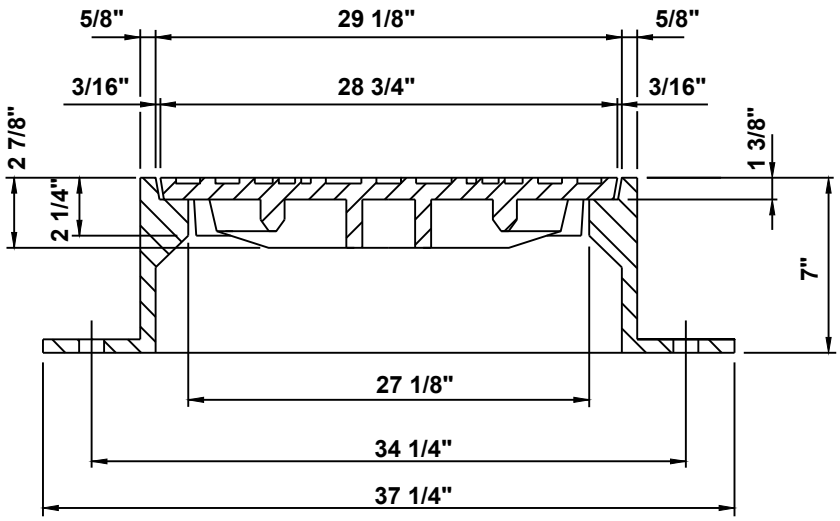

SECTION

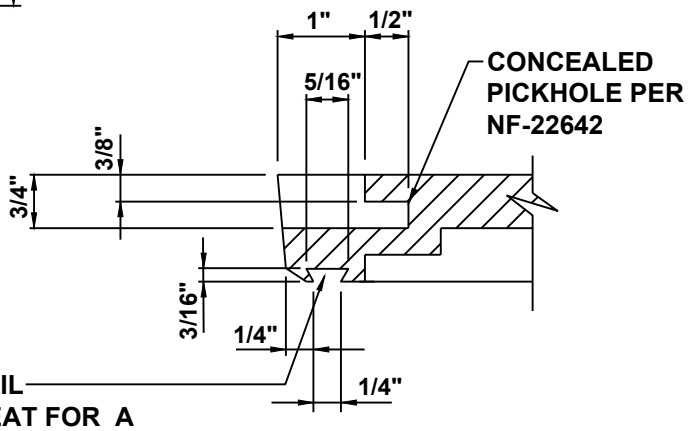

SELF SEAL DETAIL

MATERIAL:

CAST GRAY IRON ASTM A-48, CLASS 358

FINISH:

NO PAINT

WEIGHT:

FRAME - 178 LBS.
LID - 213 LBS.

MOON TOWNSHIP MUNICIPAL AUTHORITY ALLEGHENY COUNTY PENNSYLVANIA		MANHOLE COVER AND FRAME SECURITY BOLT DETAILS
Not to scale	April 2016	Standard Detail SD-015

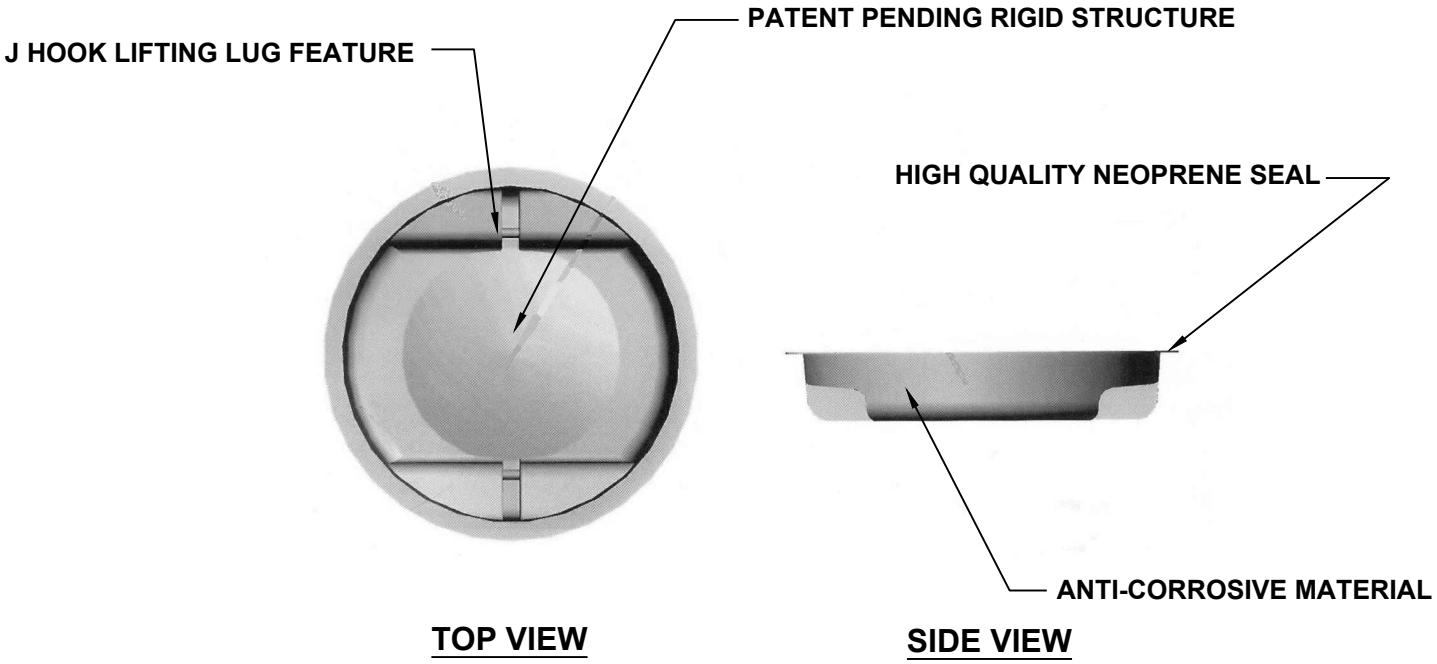

NOTES:

1. ABS INFLOW PROTECTOR SHALL BE MAN-PAN OR APPROVED EQUAL AND SHALL BE INSTALLED WHERE REQUIRED.
2. ALL INFLOW PROTECTORS SHALL BE INSTALLED WITH VENTS.

MOON TOWNSHIP MUNICIPAL AUTHORITY ALLEGHENY COUNTY PENNSYLVANIA		MANHOLE INFLOW PROTECTOR
Not to scale	April 2016	Standard Detail SD-016

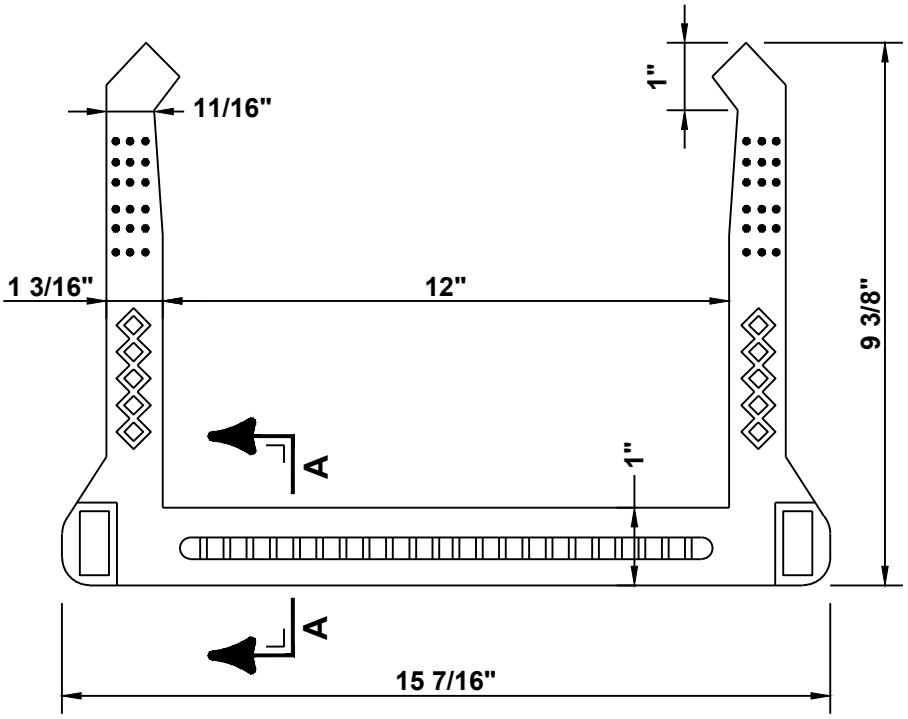

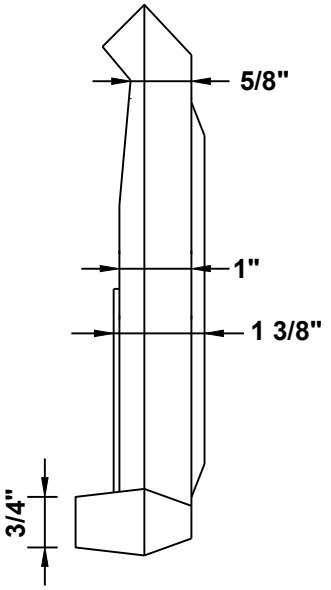

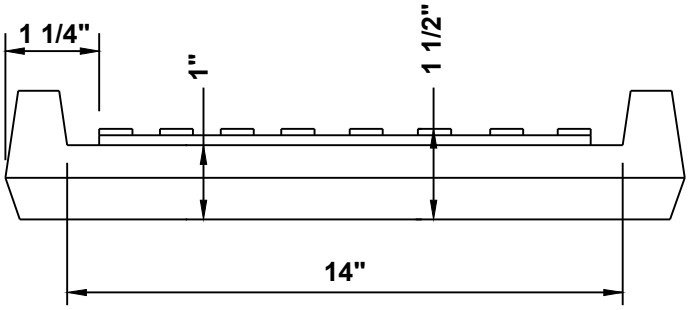

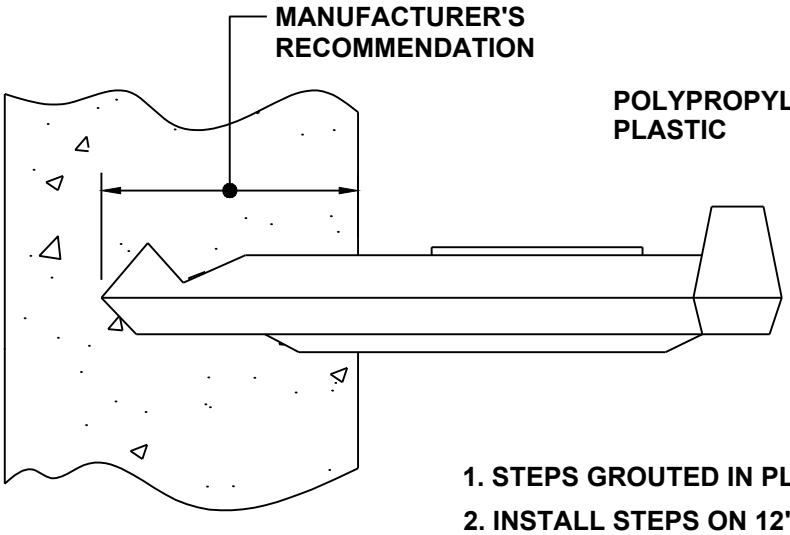

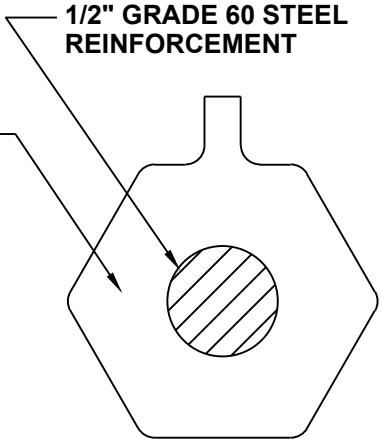

1. STEPS GROUTED IN PLACE
2. INSTALL STEPS ON 12" O/C

SECTION A

MOON TOWNSHIP MUNICIPAL AUTHORITY ALLEGHENY COUNTY PENNSYLVANIA		POLYPROPYLENE PLASTIC MANHOLE STEP
Not to scale	April 2016	Standard Detail SD-017

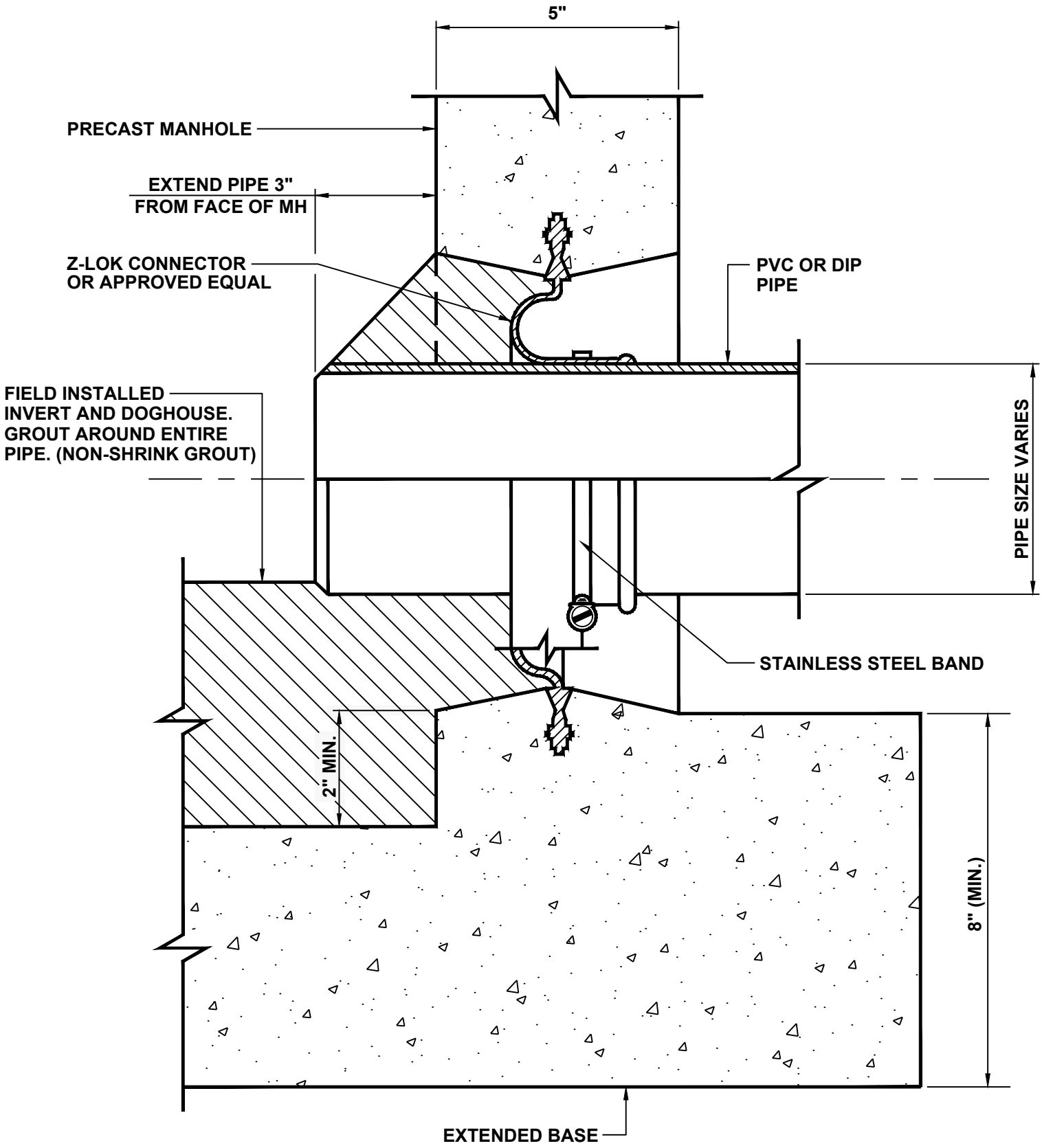

MOON TOWNSHIP MUNICIPAL AUTHORITY ALLEGHENY COUNTY PENNSYLVANIA		MANHOLE CONNECTION FOR SEWER PIPE (PRECAST BASE)
Not to scale	April 2016	Standard Detail SD-018

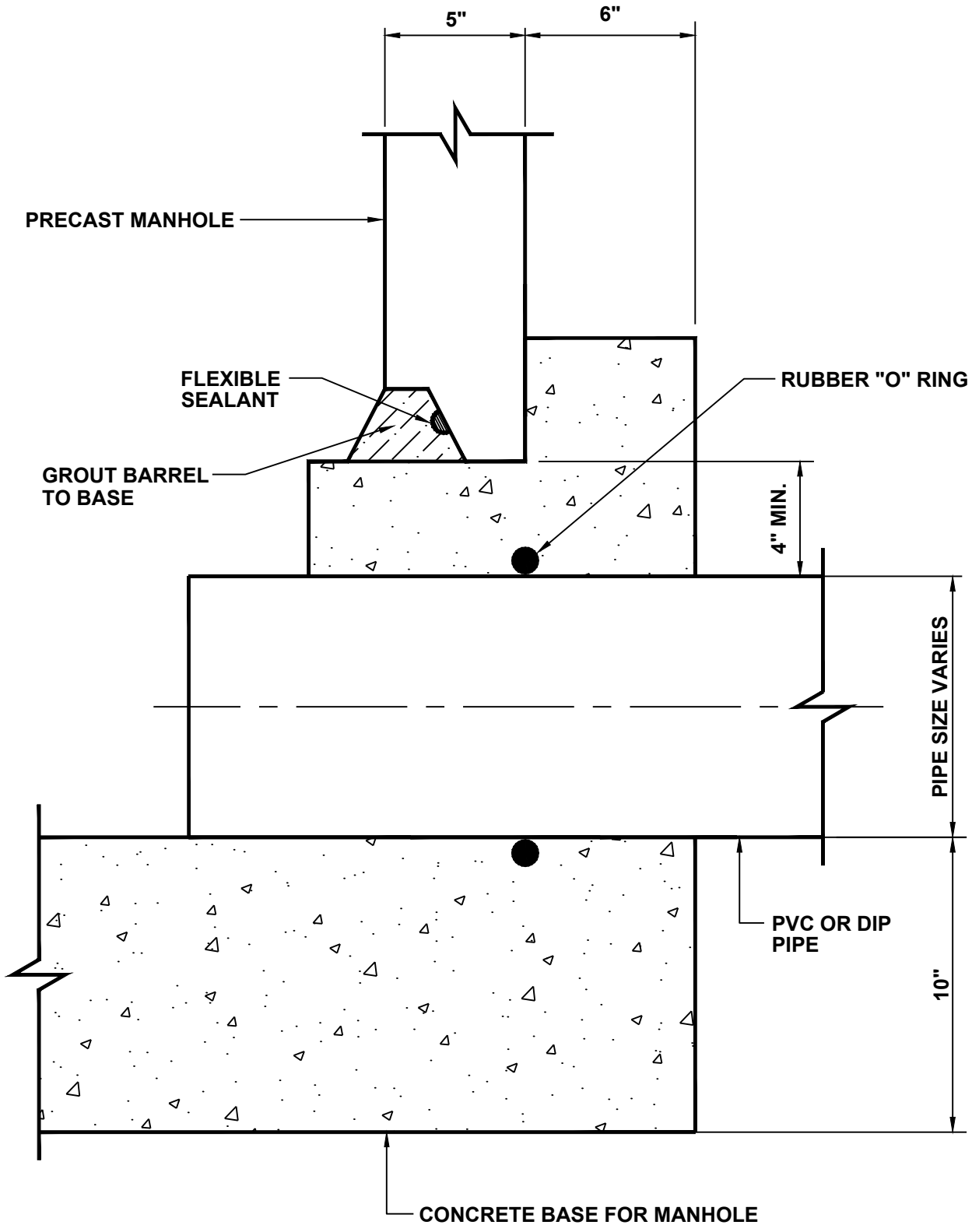

MOON TOWNSHIP MUNICIPAL AUTHORITY ALLEGHENY COUNTY PENNSYLVANIA		MANHOLE CONNECTION FOR SEWER PIPE (CAST-IN-PLACE BASE)
Not to scale	April 2016	Standard Detail SD-019

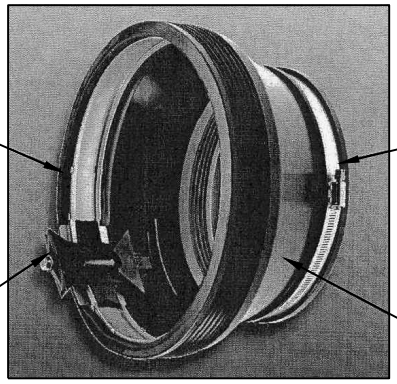

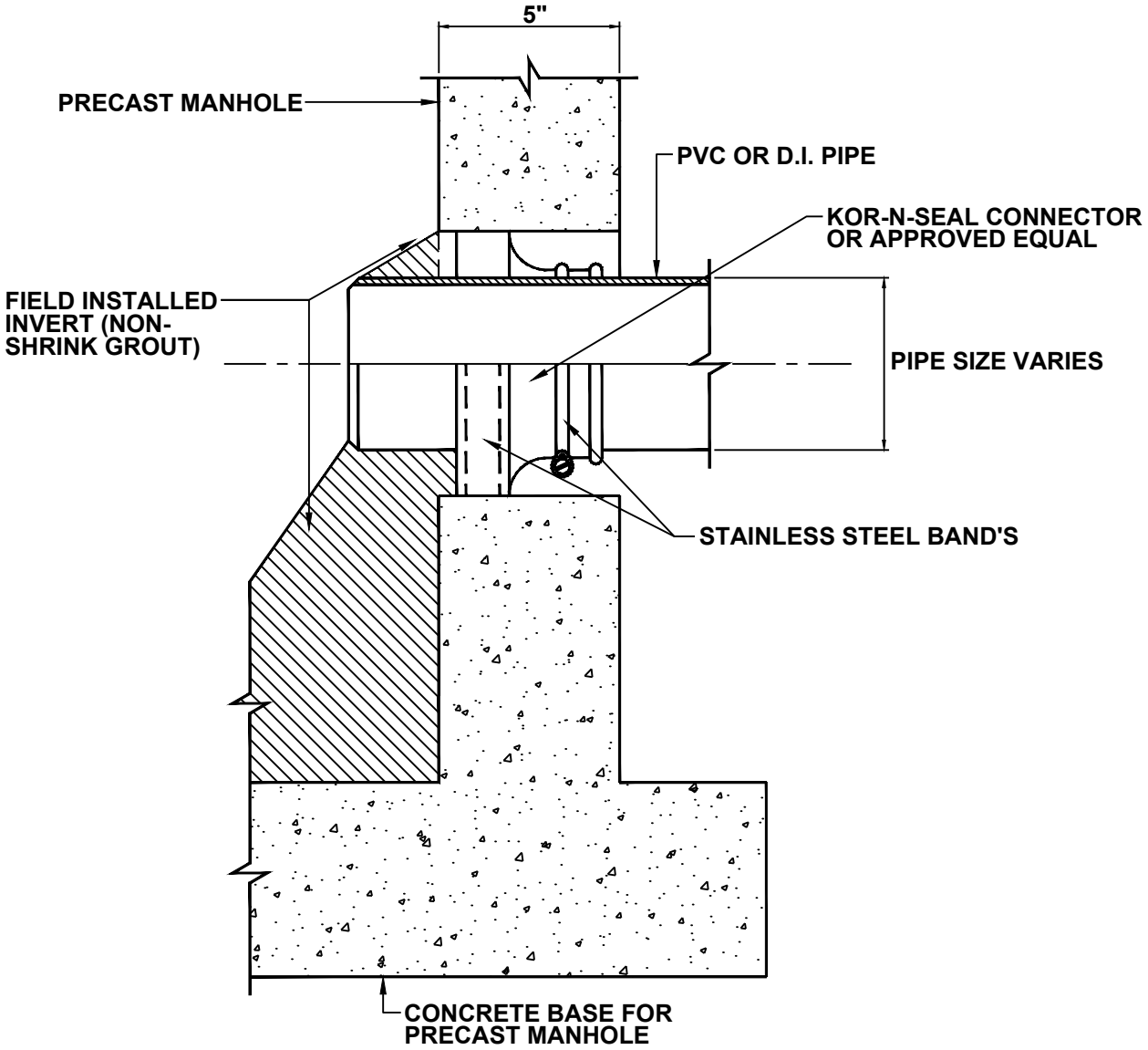

MOON TOWNSHIP MUNICIPAL AUTHORITY ALLEGHENY COUNTY PENNSYLVANIA		PIPE CONNECTION DETAIL FOR CORED MANHOLE OPENINGS
Not to scale	April 2016	Standard Detail SD-020

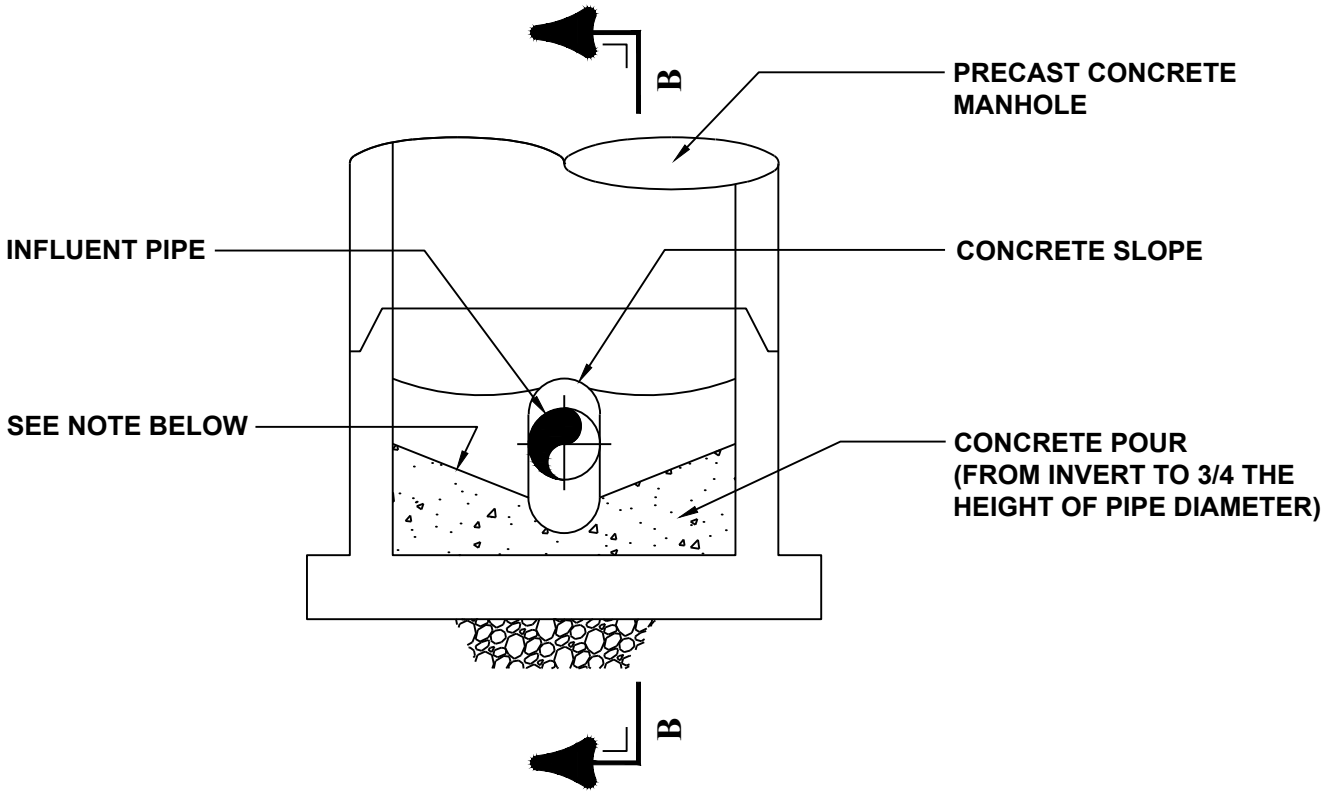

SECTION A-A

NOTE:
BENCH WALLS SHALL BE SLOPED A MINIMUM OF ONE INCH PER FOOT TO EDGE OF FLOW CHANNEL.

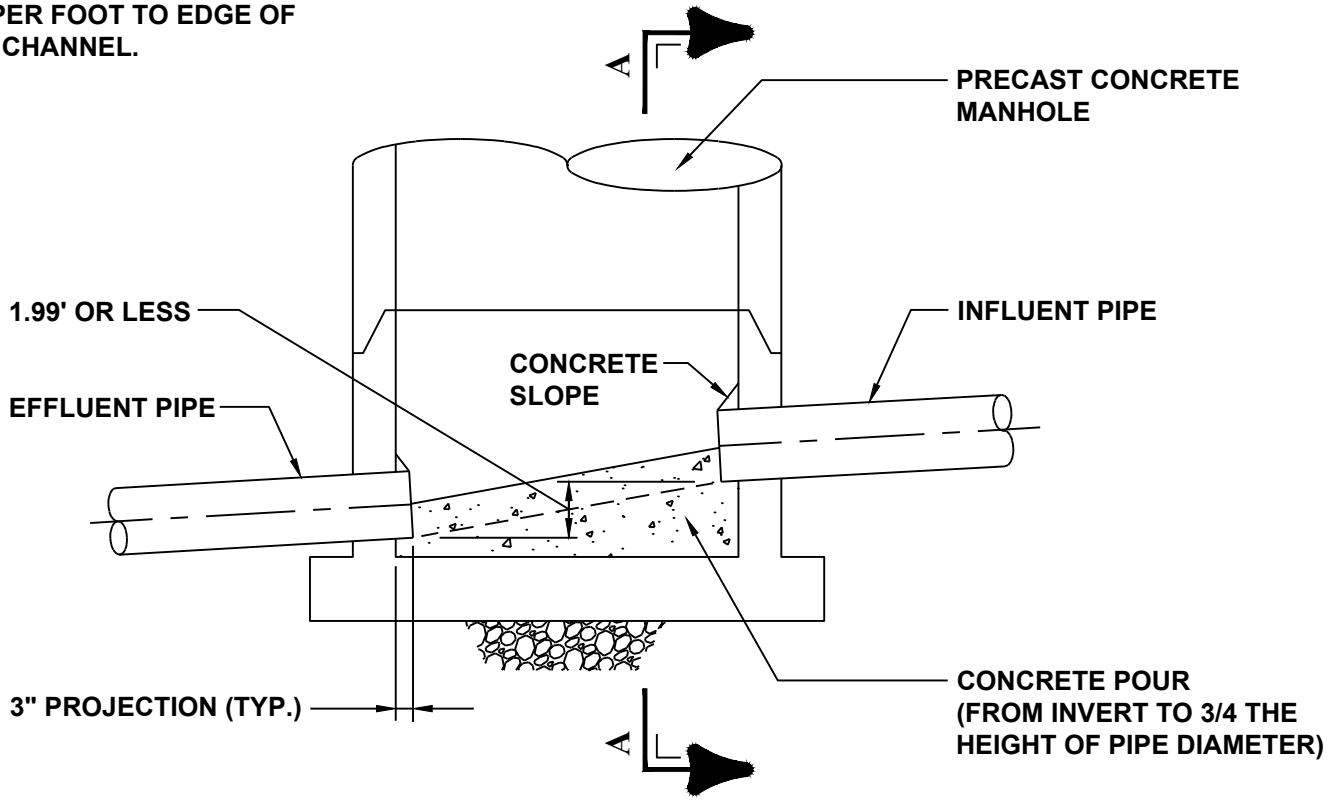

SECTION B-B

MOON TOWNSHIP MUNICIPAL AUTHORITY ALLEGHENY COUNTY PENNSYLVANIA		MANHOLE SPLASH CONNECTION
Not to scale	April 2016	Standard Detail SD-021

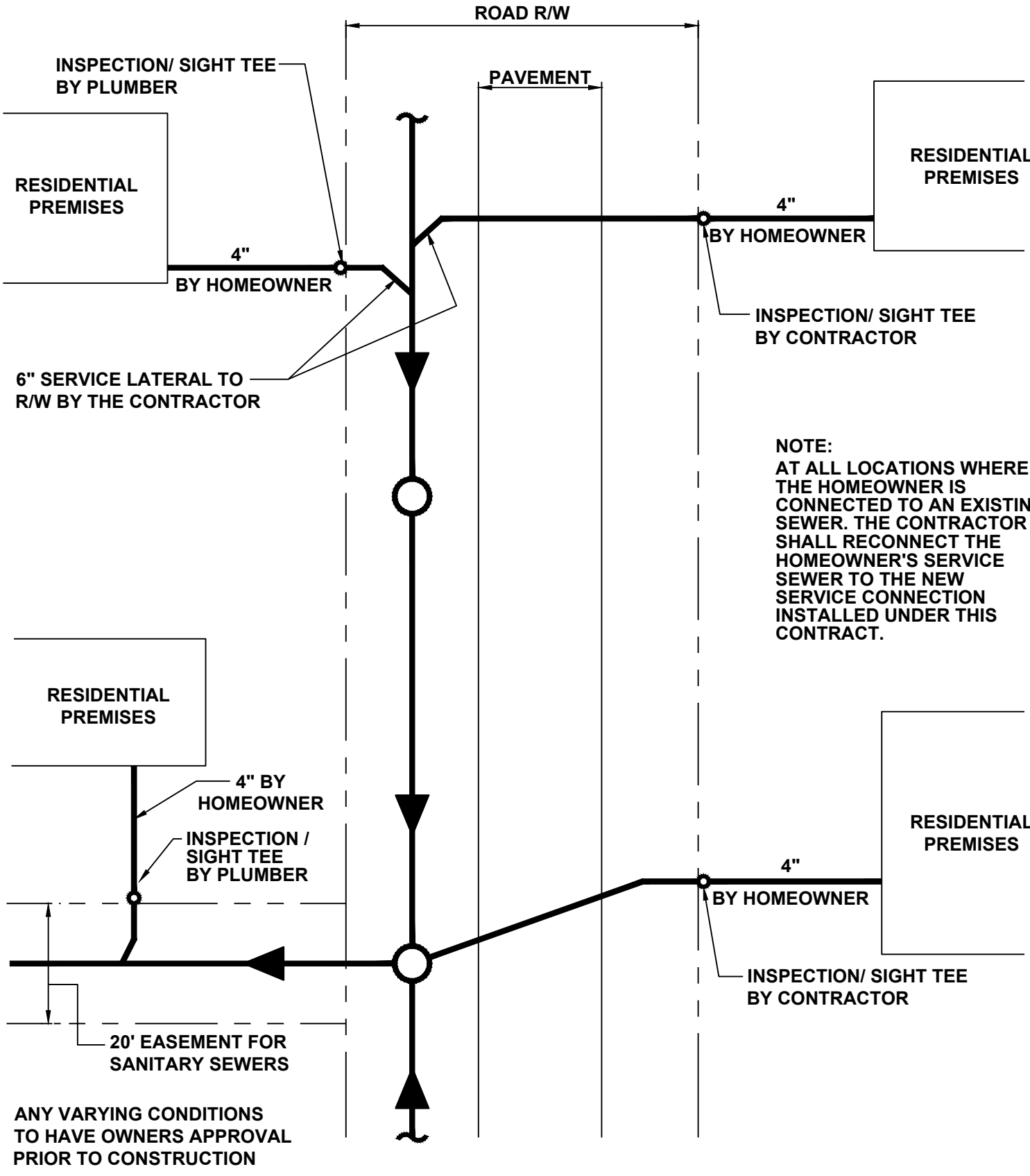

MOON TOWNSHIP MUNICIPAL AUTHORITY ALLEGHENY COUNTY PENNSYLVANIA		SEWER SERVICE LINE CONNECTIONS WITH INSPECTION/ SIGHT TEE
Not to scale	April 2016	Standard Detail SD-022

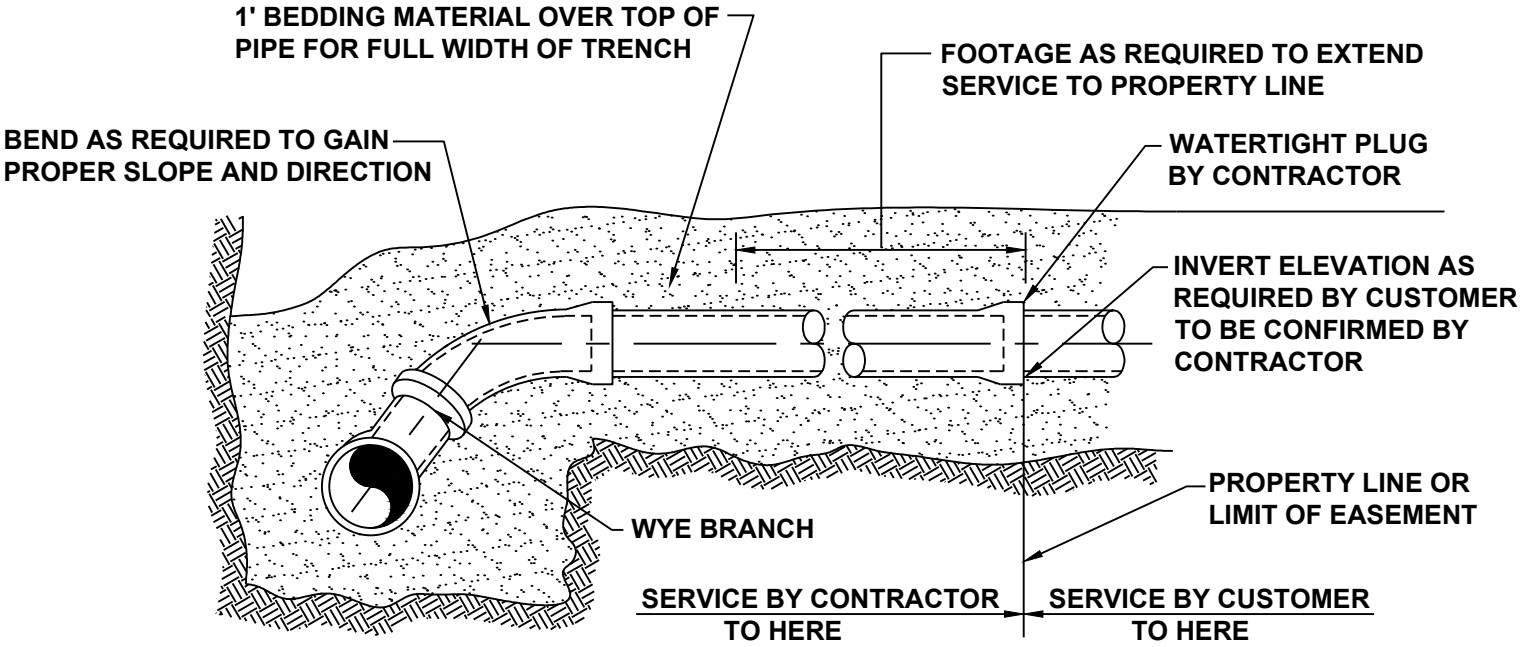

NOTE:
WHERE MAIN SEWER IS IN PRIVATE PROPERTY, FOOTAGE OF LATERAL PIPE WILL EXTEND TO THE EDGE OF SEWER RIGHT-OF-WAY.

TYPE I

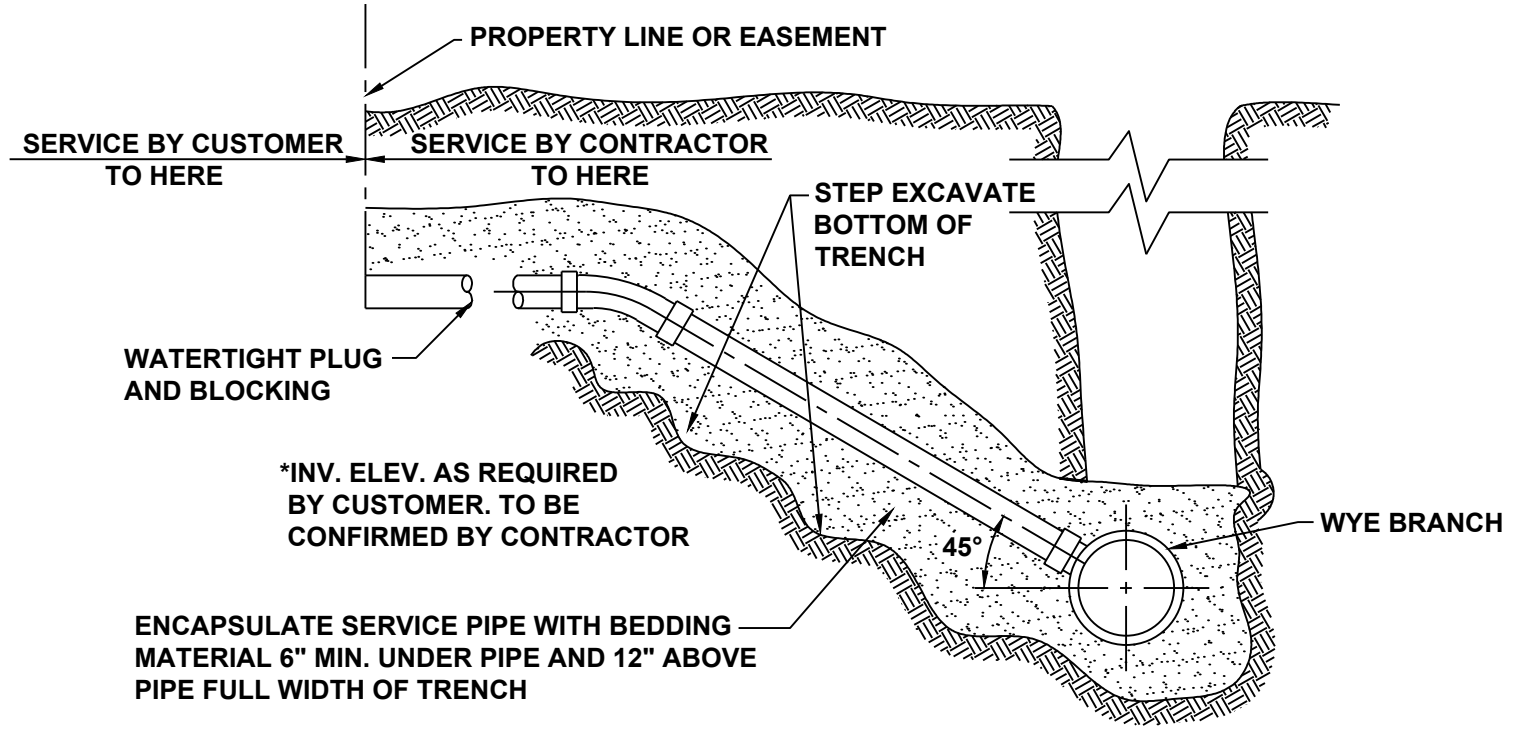

NOTE:
ALL SERVICE SEWERS SHALL BE 6" DIAMETER AND SHALL BE PVC PIPE. CHANGES IN ALIGNMENT AND CONNECTIONS TO MAIN SEWER SHALL BE ACCOMPLISHED WITH PREFABRICATED FITTINGS.

TYPE II

MOON TOWNSHIP MUNICIPAL AUTHORITY ALLEGHENY COUNTY PENNSYLVANIA		TYPICAL SEWER SERVICE LATERAL CONNECTIONS
Not to scale	April 2016	Standard Detail SD-023

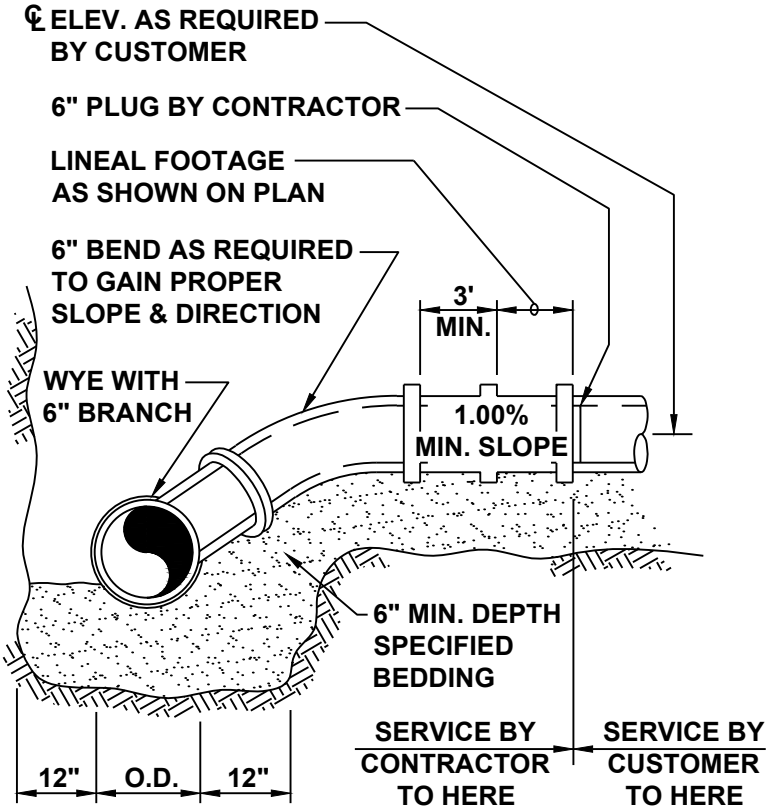

TYPE I

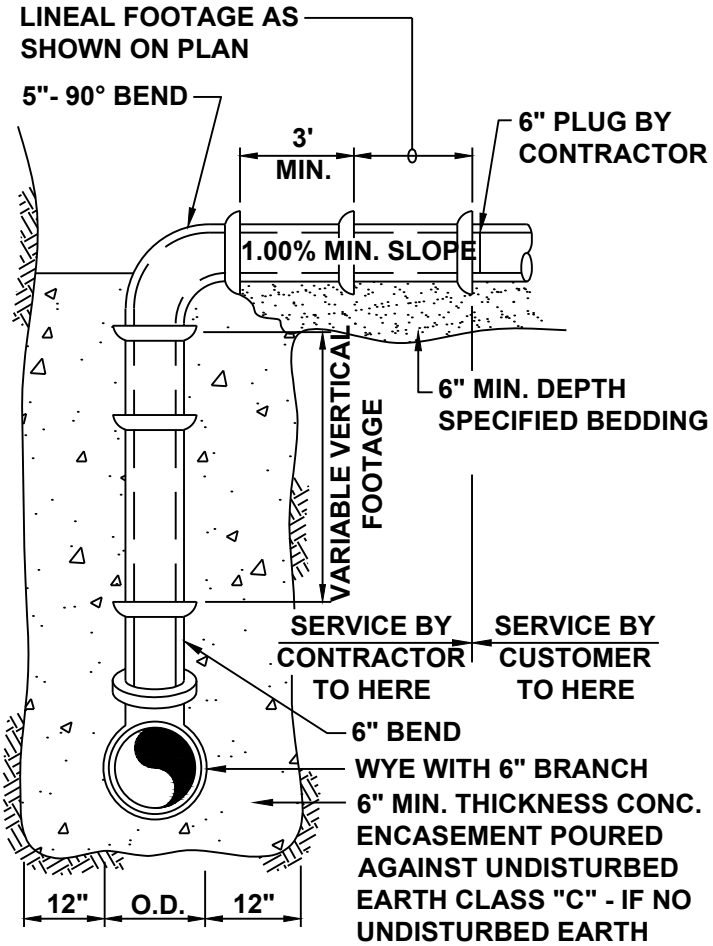

TYPE II

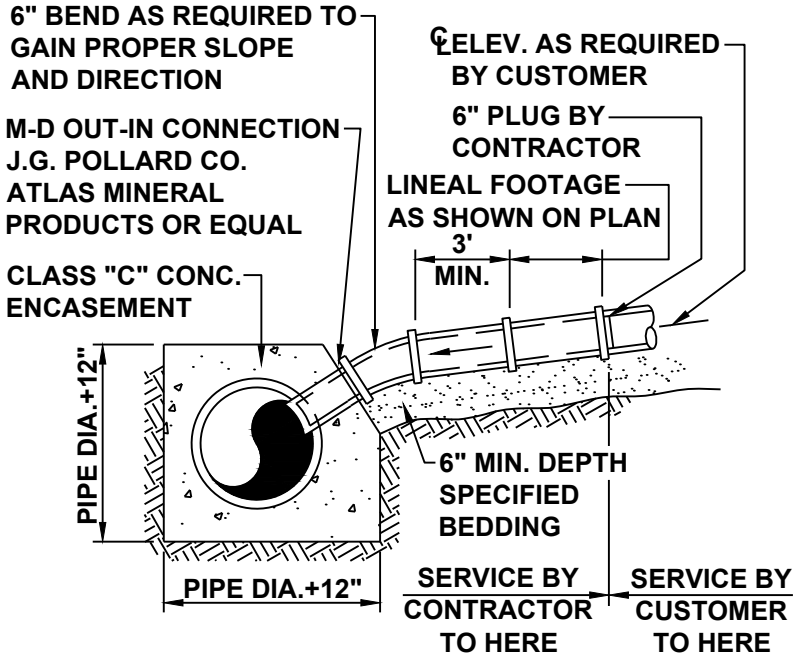

TYPE III

MOON TOWNSHIP MUNICIPAL AUTHORITY ALLEGHENY COUNTY PENNSYLVANIA		SEWER SERVICE CONNECTIONS
Not to scale	April 2016	Standard Detail SD-024

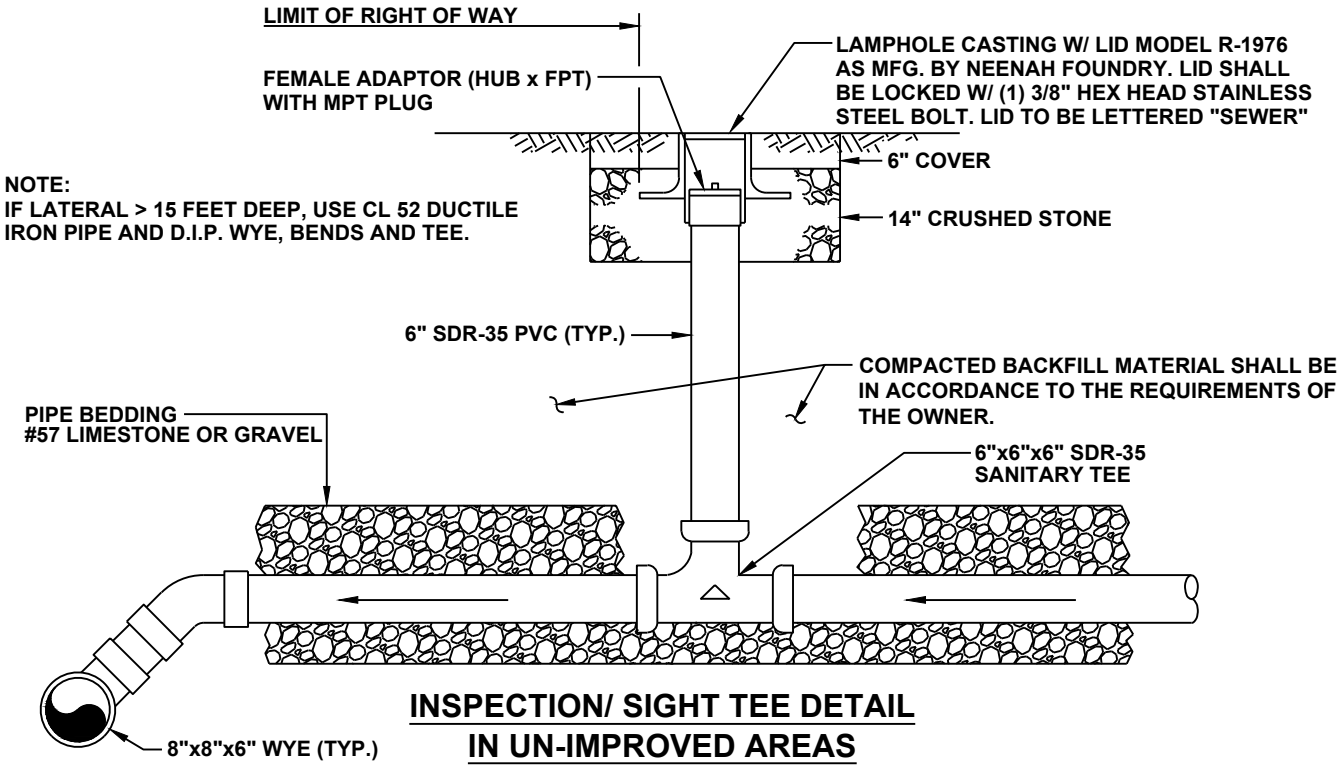

INSPECTION/ SIGHT TEE DETAIL IN UN-IMPROVED AREAS

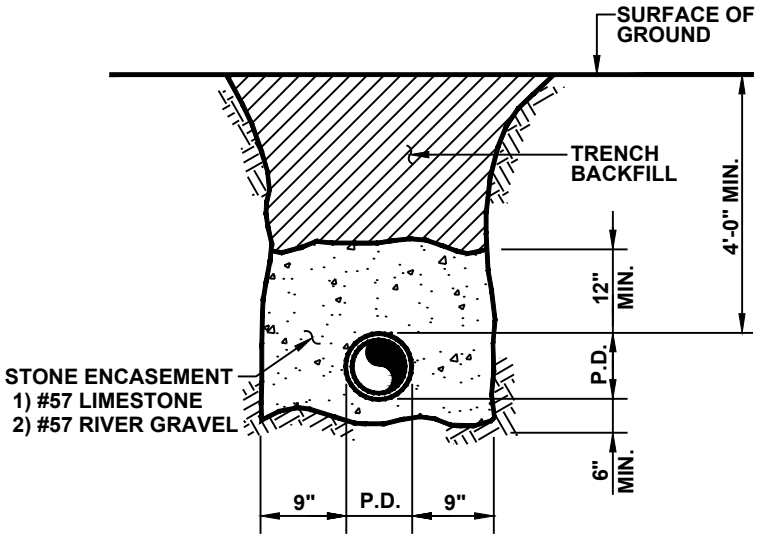

SEWER SERVICE LINE TRENCH CROSS SECTION

REFER TO NOTES ON SD-025A

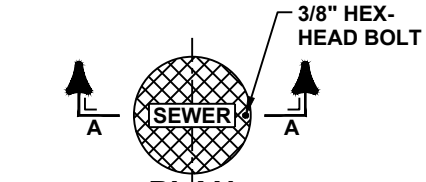

PLAN

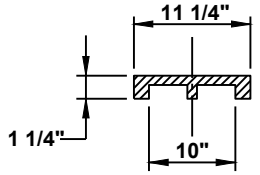

SECTION A-A

MOON TOWNSHIP MUNICIPAL AUTHORITY ALLEGHENY COUNTY PENNSYLVANIA		SEWER SERVICE LINE INSPECTION/ SIGHT TEE
Not to scale	April 2016	Standard Detail SD-025

INSPECTION/ SIGHT TEE REQUIRED AT PUBLIC SEWER CONNECTION
ALLEGHENY COUNTY

CHANGES TO ALLEGHENY COUNTY PLUMBING CODE, EFFECTIVE SEPTEMBER 1, 1998

SEC. 225.4 OF THE ALLEGHENY COUNTY PLUMBING CODE READS....

"ALL NEW OR REPLACED SANITARY SEWER LATERALS, WHEN CONNECTED TO THE PUBLIC SEWERS SHALL BE PROVIDED WITH AN INSPECTION/ SIGHT TEE AT THE PROPERTY LINE. SUCH CONNECTION SHALL BE BROUGHT TO GRADE WITH A WATER AND AIR TIGHT CLEANOUT ASSEMBLY."

NOTES:

1. **WHERE A PUBLIC SEWER MAIN IS LAID WITHIN A DEDICATED PUBLIC SEWER EASEMENT OR UTILITY EASMENT, THE INSPECTION/ SIGHT TEE SHALL BE LOCATED AT THE RIGHT-OF-WAY LINE.**
2. **INSPECTION/ SIGHT TEE SHALL BE SET ON A MAXIMUM HORIZONTAL SLOPE OF 2.0 PERCENT SLOPE.**
3. **PRECAUTIONS SHALL BE MADE AS TO NOT SET THE INSPECTION/ SIGHT TEE IN DRIVEWAYS SUBJECT TO VEHICLE TRAFFIC. OFF-SET LATERAL/ BUILDING SEWER IF NECESSARY.**
4. **INSPECTION/ SIGHT TEES ARE NOT PERMITTED IN PUBLIC SIDEWALKS OR STREETS.**
5. **SANITARY MATERIALS- TEE (6"x 6"x 6") & 6" STANDPIPE SHALL BE SDR 35 PVC WITH ELASTOMERIC SEALS (ASTM D-3212).**

   CLEAN ADAPTER (HUB x FPT) WITH MPT PLUG- SDR 35 PVC.

   LAMPHOLE FRAME AND LID- NEENAH FOUNDRY R-1976 WITH 3/8" STAINLESS STEEL LOCK DOWN BOLT. INSTALL FRAME IN CONCRETE PAD. LETTERING- "SEWER"
6. **COMPACTION REQUIREMENTS- CONTRACTOR OR PLUMBER MUST THOROUGHLY COMPACT ALL DISTURBED AREAS. ANY SUBSEQUENT SETTLEMENT WILL BE CORRECTED AT THE PROPERTY OWNER'S EXPENSE.**
7. **INSPECTION REQUIREMENTS- LAMPHOLE MUST BE FLUSH TO GRADE. ON NEW CONSTRUCTION, THE STANDPIPE SHALL BE CUT AND LAMPHOLE FRAME AND LID SET ONLY AFTER FINAL GRADING AND LANDSCAPING IS COMPLETED. WHEN INSPECTION/ SIGHT TEE ASSEMBLY IS COMPLETED, AN UNOBSTRUCTED SIGHTING FROM THE TOP OF THE STAND PIPE TO BASE SHOULD BE OBSERVED, OTHERWISE, THE ASSEMBLY SHALL BE REJECTED.**
8. **INSPECTION / SIGHT TEES INSTALLED IN WOODED AREAS SHALL BE EXTENDED 12" ABOVE FINAL GRADE. A CONCRETE PAD, 2' SQUARE OR 2' DIAMETER SHALL BE A MINIMUM OF 8" ABOVE FINAL GRADE WITH A TOTAL MINIMUM DEPTH OF 20" ON A 6" DEPTH OF STONE.**
9. **THE CONTRACTOR OR THE PLUMBER WILL BE REQUIRED TO TAKE MEASUREMENTS TO REFERENCE LOCATION OF INSPECTION/ SIGHT TEES.**

   REFERENCE SHALL BE SUBMITTED TO THE AUTHORITY FOR FILING. FAILURE TO DO SO MAY RESULT IN DELAYS IN OBTAINING A BUILDING OCCUPANCY PERMIT.

MOON TOWNSHIP MUNICIPAL AUTHORITY ALLEGHENY COUNTY PENNSYLVANIA		INSPECTION/ SIGHT TEE REQUIRED AT PUBLIC SEWER CONNECTION
Not to scale	April 2016	Standard Detail SD-025A

NOT USED

MOON TOWNSHIP MUNICIPAL AUTHORITY ALLEGHENY COUNTY PENNSYLVANIA		
Not to scale	April 2016	Standard Detail SD-026

NOT USED

MOON TOWNSHIP MUNICIPAL AUTHORITY ALLEGHENY COUNTY PENNSYLVANIA		
Not to scale	April 2016	Standard Detail SD-027

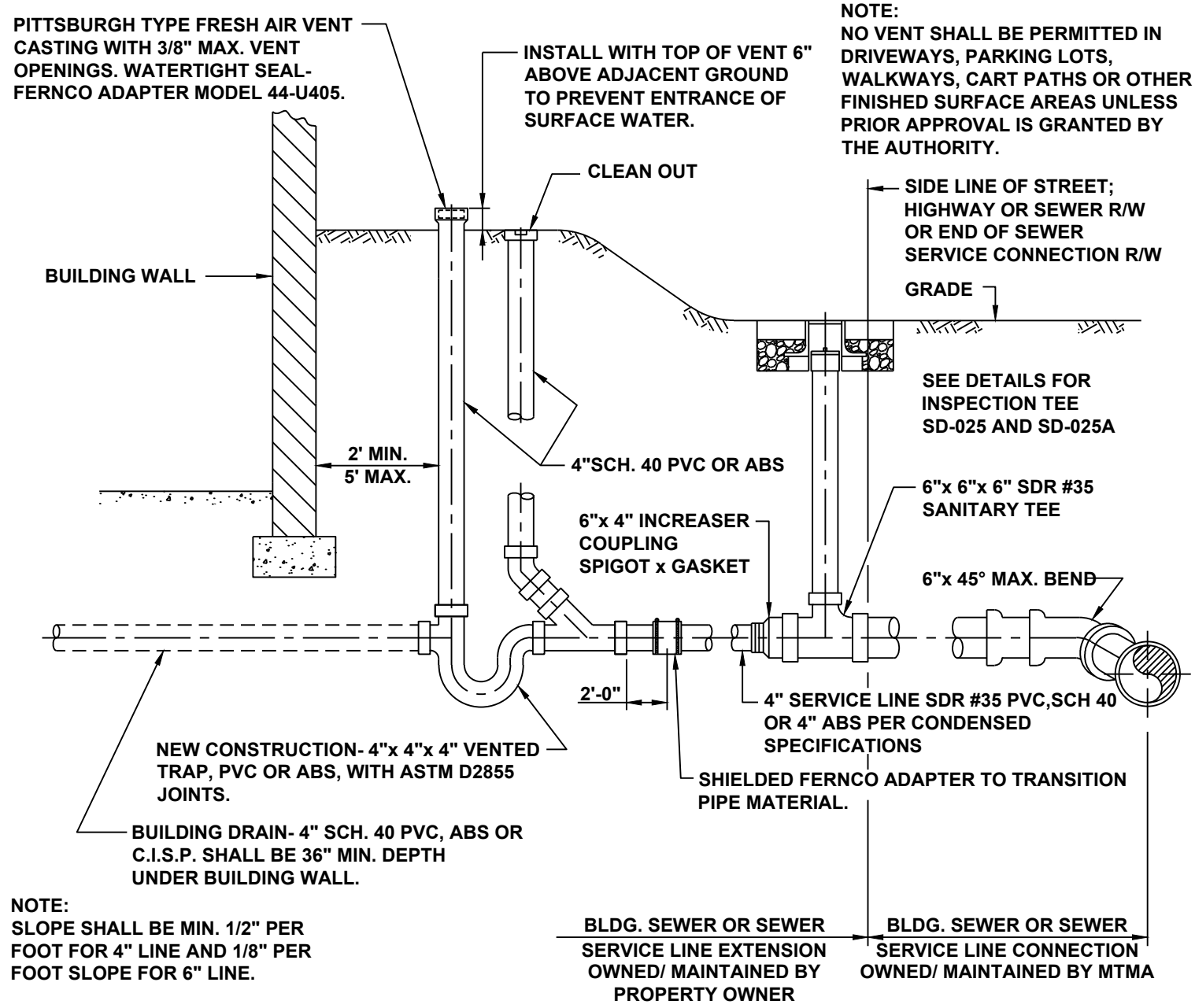

NOTE:
SLOPE SHALL BE MIN. 1/2" PER FOOT FOR 4" LINE AND 1/8" PER FOOT SLOPE FOR 6" LINE.

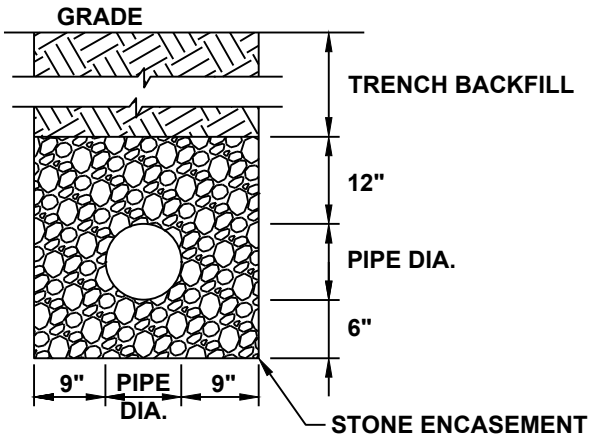

SERVICE SEWER LINE TRENCH SECTION

NOTE:
SEWER SERVICE LINE AND SEWER SERVICE CONNECTIONS SHALL BE INSTALLED BY SKILLED WORKMEN AT THE COST OF THE CUSTOMER IN ACCORDANCE WITH THE RULES AND REGULATIONS AND DETAILED SPECIFICATIONS OF THE AUTHORITY. SEE SD-028A FOR CONDENSED INSTALLATION SPECIFICATIONS.

MOON TOWNSHIP MUNICIPAL AUTHORITY ALLEGHENY COUNTY PENNSYLVANIA		LINE EXTENSION AND SERVICE CONNECTION
Not to scale	April 2016	Standard Detail SD-028

General - Service line extension shall include connection to service line connection; test tee; sewer service line; running trap with fresh air vent; cleanout; and connection to building drain. Downspouts, rain conductors, area drains, driveway drains, or french drains shall not be connected to the sewer service line.

Building Drain - All sewers below floors of building and 5' outside building shall be Cast Iron soil pipe (CISP), Schedule 40 Polyvinyl Chloride (PVC) or Schedule 40 Acrylonitrile Butadiene Styrene (ABS). A running trap with vent shall be installed at the end of building drain as shown. A cleanout shall be included on the downstream side of all traps installed below 4' in depth. Where a building trap exceeds 6' below finished grade, the trap shall be installed within the structure's basement or cellar and vented to the outside (See Standard Detail SD-028). Vents may not be located in driveways, parking lots, walkways, cart paths or other finished surface areas unless approved by the Authority.

Size - Four inch diameter pipe provided that it is laid on minimum slopes of ¼" per foot and cleanouts are provided at intervals of not more than 50 feet. If the minimum cover of 4' over the service line cannot be maintained or where the grade exceeds 20% or greater, ductile iron pipe will be used in lieu of PVC or ABS. Ductile iron service lines exceeding grades 20% or greater shall require restrained joint pipe with concrete anchors.

Cleanouts - Consisting of wye branch, 45° bend, riser and watertight cap, are required at intervals specified above or at all directional changes greater than 45°. If a cleanout is located in a driveway or any area subject to vehicular traffic, encase the wye branch, 45° bend and standpipe in 6" of concrete in addition to installing a cast iron metal cleanout frame and lid.

Materials - Lines to be; Bell end PVC Pipe (ASTM-D3034) - SDR 35 with flexible elastomeric seals (ASTM 3212), Schedule 40 PVC or ABS. Class 52 Ductile Iron Pipe when required by Authority.

Installation - Before digging trench, installer should expose existing building sewer connection and existing building drain. Trench width shall be kept to a minimum width and have uniform slope at approved grade and as near as possible at right angles to the street. Place crushed stone (3/4" gravel size #57) in trench to grade of pipe providing bell holes for each joint. Backfill 12" overtop the pipe with crushed stone with the remaining backfill, if satisfactory, with material from original excavation. A 10' horizontal (minimum) distance shall exist between the building sewer and the water service pipe separated by undisturbed or compacted earth. Exceptions may be granted with approval by the Authority. Other pipelines such as gas line, french drains and roof leaders are required to have a minimum of 3' horizontal separation. It shall be prohibited to discharge water from french drains, roof leaders or water discharged from basement sumps into the Sanitary sewer or to the stone encasement specifically designed to protect the sewer service line.

Adapters - Connections between the plain ends of different pipe material shall be made with shielded flexible couplings manufactured by Calder or Fernco (Series 1002 for VCP to PVC, Series 3000 for CIP to PVC). Unshielded couplings are not permitted underground.

Inspection/ Sight Tee - An inspection/ Sight tee shall be installed in accordance with the Allegheny County Plumbing code. The materials and methods of construction of the inspection/sight tee, riser pipe, lamphole casting, plug and concrete pad shall be in accordance with the Authority construction Standards. (See Standard DetailSD-025)

Inspection - The Authority shall be notified at least 24 hours prior to the inspection of the building drain, service line and related appurtenances. The inspection shall be conducted prior to placing the 12" of crushed stone over the pipe so that the entire installation can be visually inspected and field measurements taken for the recording of all pertinent information relating to the installation of the pipe. The inspection shall consist of an air test at a pressure of 5 psi for a duration of 5 minutes without any pressure loss or a water test if approved. Final inspection will not be scheduled until all applications for service have been submitted and approved, and all tapping fees or other charges due and payable have been remitted to the Authority. If the sewer does not pass inspection, a re-inspection fee will be charged and must be paid before rescheduling.

Final Connection - If a complete connection to the building drain is not made at the time of the installation of the building sewer, a temporary plug shall be installed into the end of the lateral and shall not be removed until such time as the connection is made to the building drain and an Authority Inspector is present.

Final inspection - The Authority will conduct a final inspection of the property to ensure that all sewer facilities located within the premises have been installed and maintained in accordance to our specifications.- If no deficiencies are noted at the time of inspection, the Authority's inspector will sign off on the Building Permit as Final. Any violations cited during the final inspection must be corrected prior to the Authority's Inspector signing off. No Occupancy Permit will be issued by the Township until all violations are rectified and the permit signed.

OSHA Standards - All excavations shall be performed in accordance with the latest edition of Employer-Employee Safe Practices for Excavation and Trenching Operations.

MOON TOWNSHIP MUNICIPAL AUTHORITY ALLEGHENY COUNTY PENNSYLVANIA		SERVICE LINE EXTENSION AND SERVICE LINE CONNECTION CONDENSED SANITARY SEWER SYSTEM INSTALLATION SPECIFICATION
Not to scale	April 2016	Standard Detail SD-028A

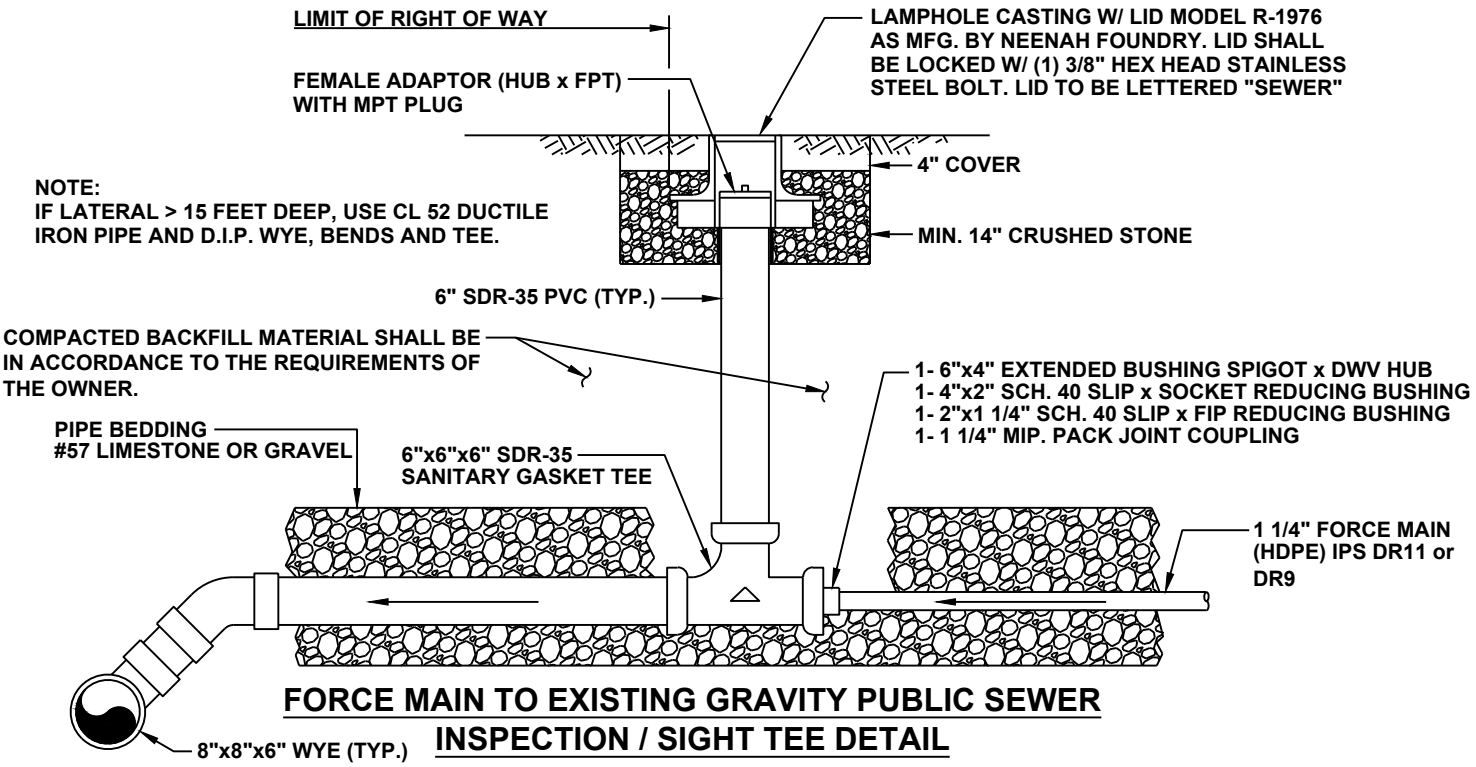

FORCE MAIN TO EXISTING GRAVITY PUBLIC SEWER
INSPECTION / SIGHT TEE DETAIL

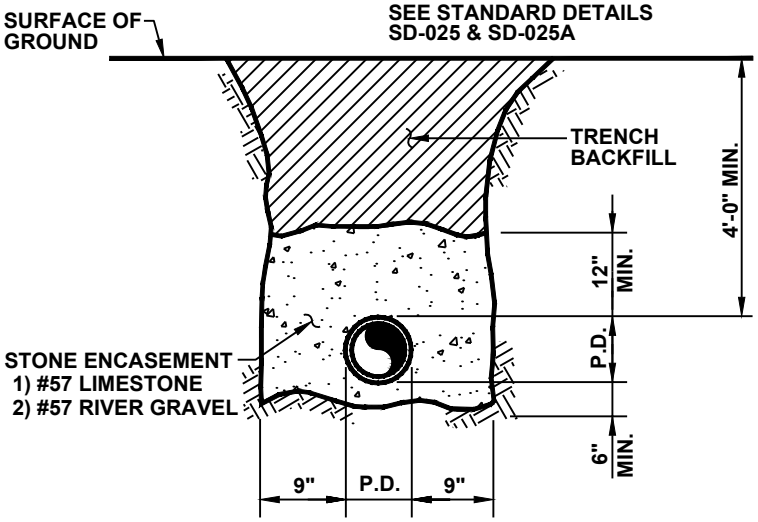

SEWER SERVICE LINE
TRENCH CROSS SECTION

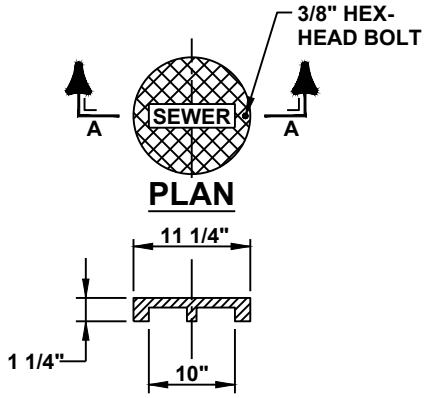

PLAN

SECTION A-A

MOON TOWNSHIP MUNICIPAL AUTHORITY ALLEGHENY COUNTY PENNSYLVANIA		CONNECTION FOR RESIDENTIAL SANITARY SEWER FORCE MAIN TO EXISTING GRAVITY PUBLIC SEWER
Not to scale	April 2016	Standard Detail SD-029

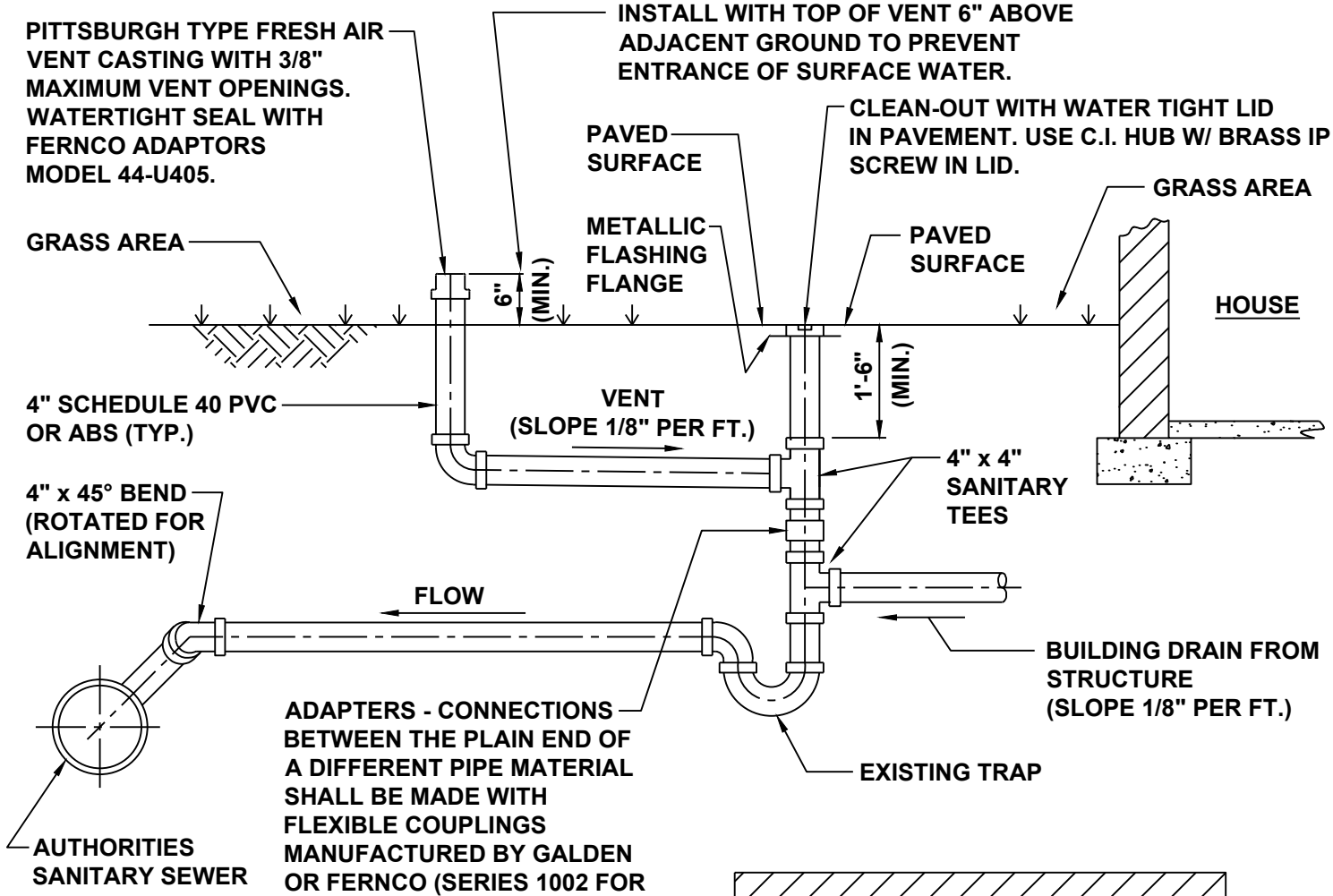

SECTION

NOTE:

NO VENT SHALL BE PERMITTED IN DRIVEWAYS, PARKING LOTS, WALKWAYS, CAR PORTS OR OTHER FINISHED SURFACE AREAS UNLESS PRIOR APPROVAL IS GRANTED BY THE AUTHORITY.

CONDENSED INSTALLATION SPECIFICATIONS

SEWER SERVICE LINE AND SEWER SERVICE CONNECTIONS SHALL BE INSTALLED BY SKILLED WORKMEN AT THE COST OF THE CUSTOMER IN ACCORDANCE WITH RULES AND REGULATIONS AND DETAILED SPECIFICATIONS OF THE AUTHORITY WHICH ARE CONDENSED AS FOLLOWS ON SD-028A.

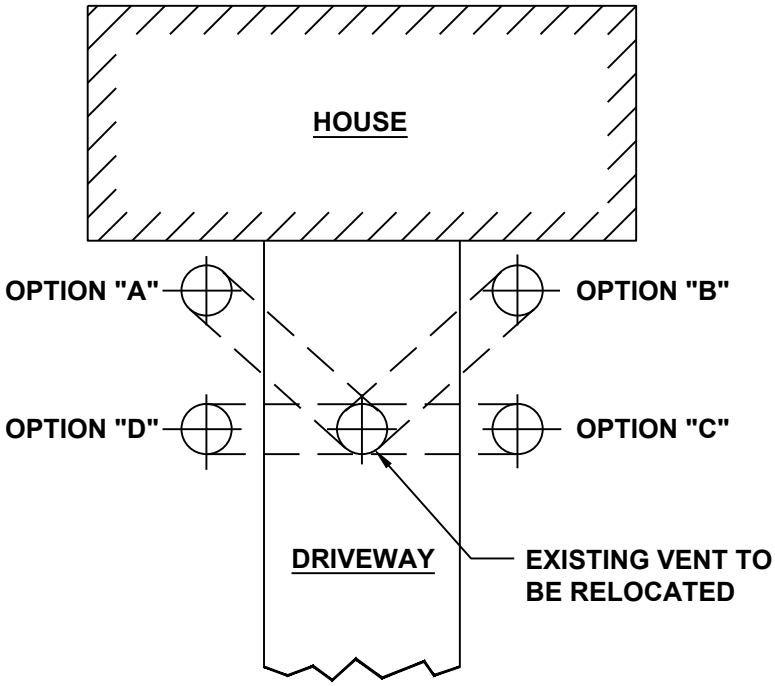

PLAN

MOON TOWNSHIP MUNICIPAL AUTHORITY ALLEGHENY COUNTY PENNSYLVANIA		RESIDENTIAL SANITARY SEWER SYSTEM SEWER VENT RELOCATION
Not to scale	April 2016	Standard Detail SD-030

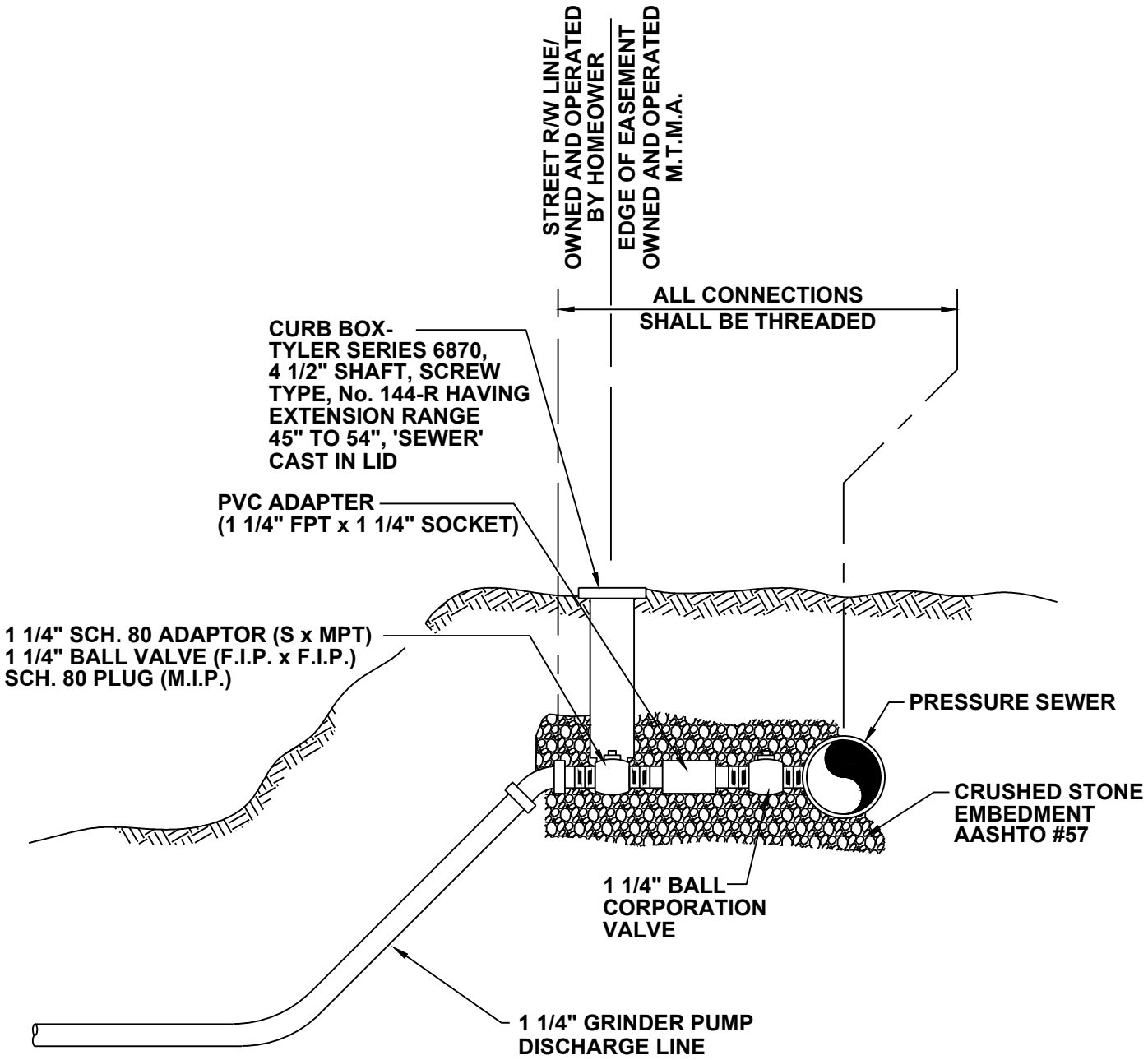

MOON TOWNSHIP MUNICIPAL AUTHORITY ALLEGHENY COUNTY PENNSYLVANIA		SMALL DIAMETER FORCE MAIN CONNECTION TO PRESSURE SEWER
Not to scale	April 2016	Standard Detail SD-031

NOT USED

MOON TOWNSHIP MUNICIPAL AUTHORITY ALLEGHENY COUNTY PENNSYLVANIA		
Not to scale	April 2016	Standard Detail SD-032

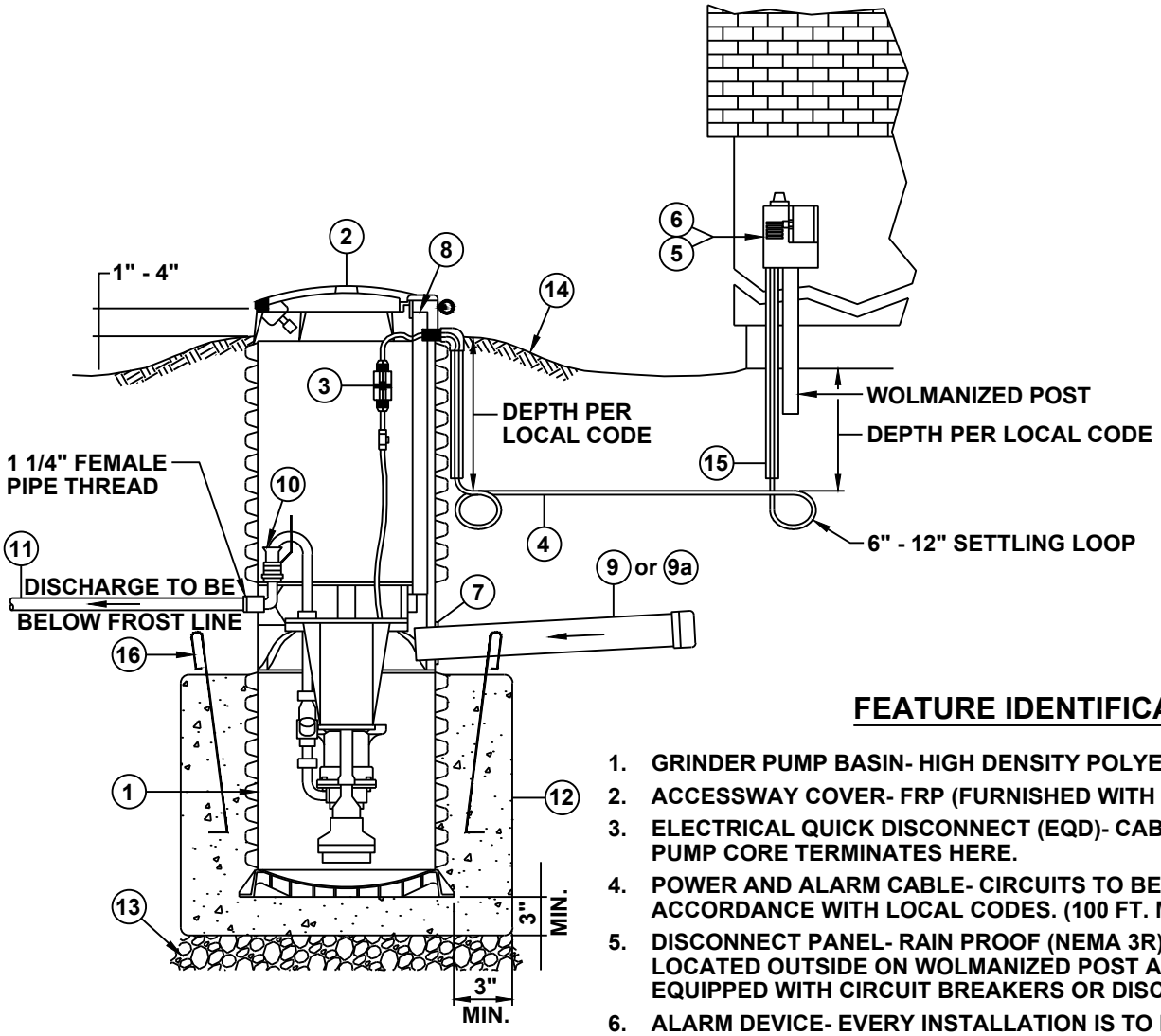

FEATURE IDENTIFICATION

1. GRINDER PUMP BASIN- HIGH DENSITY POLYETHYLENE (HDPE).
2. ACCESSWAY COVER- FRP (FURNISHED WITH PADLOCK).
3. ELECTRICAL QUICK DISCONNECT (EQD)- CABLE FROM PUMP CORE TERMINATES HERE.
4. POWER AND ALARM CABLE- CIRCUITS TO BE INSTALLED IN ACCORDANCE WITH LOCAL CODES. (100 FT. MAXIMUM LENGTH)
5. DISCONNECT PANEL- RAIN PROOF (NEMA 3R) ENCLOSURE TO BE LOCATED OUTSIDE ON WOLMANIZED POST ADJACENT TO HOUSE. EQUIPPED WITH CIRCUIT BREAKERS OR DISCONNECT SWITCH.
6. ALARM DEVICE- EVERY INSTALLATION IS TO HAVE AN ALARM DEVICE TO ALERT THE HOMEOWNER OF A POTENTIAL MALFUNCTION. VISUAL DEVICES SHOULD BE PLACED IN VERY CONSPICUOUS LOCATIONS.
7. INLET- EPDM GROMMET (4.5" I.D.). FOR 4.5" O.D. DWV PIPE.
8. WET WELL VENT- 2" TANK VENT, SUPPLIED BY FACTORY IN UNITS WITH ACCESSWAYS.
9. GRAVITY SERVICE LINE- 4" DWV, (4.5" O.D.). SUPPLIED BY OTHERS.

9a. STUB-OUT- 4" X 5' LONG WATERTIGHT STUB-OUT, TO BE INSTALLED AT TIME OF BURIAL UNLESS THE GRAVITY SERVICE LINE IS CONNECTED DURING INSTALLATION. SUPPLIED BY OTHERS.

10. DISCHARGE VALVE- 1 1/4" FEMALE PIPE THREAD.
11. DISCHARGE LINE- 1 1/4" NOMINAL PIPE SIZE. SUPPLIED BY OTHERS.
12. CONCRETE ANCHOR-
    VOLUME OF CONCRETE REQUIRED- 13.2 FT.^{3} (.48 YD.^{3})
    WEIGHT OF CONCRETE REQUIRED- 2000 LBS. (1985 LBS.)
13. BEDDING MATERIAL- 6" MIN. DEPTH, ROUND AGGREGATE, (GRAVEL).
14. FINISHED GRADE- GRADE LINE TO BE 1 TO 4 INCHES BELOW REMOVABLE LID AND SLOPE AWAY FROM THE STATION.
15. CONDUIT- 1" OR 1 1/4", MATERIAL AND BURIAL DEPTH AS REQUIRED BY LOCAL CODE.
16. REBAR- REQUIRED TO LIFT TANK AFTER BALLAST (CONCRETE ANCHOR) HAS BEEN ATTACHED, 4 PLACES, EVENLY SPACED AROUND TANK.

MOON TOWNSHIP MUNICIPAL AUTHORITY ALLEGHENY COUNTY PENNSYLVANIA		GRINDER PUMP (OUTSIDE INSTALLATION)
Not to scale	April 2016	Standard Detail SD-033

TANK INSTALLATION

THE TANK IS SUPPLIED WITH A STANDARD GROMMET FOR CONNECTING THE 4" DWV (4.5" O.D.) INCOMING SEWER DRAIN. OTHER INLET TYPES AND SIZES ARE OPTIONAL (CAUTION- 4" DR-35 PIPE IS OF SMALLER DIAMETER AND WON'T CREATE A WATERTIGHT JOINT WITH THE STANDARD GROMMET). PLEASE CONFIRM THE CORRECT INLET BEFORE CONTINUING. IF A CONCRETE BALLAST IS ATTACHED TO THE TANK LIFT ONLY BY THE LIFTING EYES, (REBAR) EMBEDDED IN THE CONCRETE. DO NOT DROP, ROLL, OR LAY TANK ON ITS SIDE. THIS WILL DAMAGE THE UNIT AND VOID THE WARRANTY.

EXCAVATE A HOLE TO A DEPTH, SO THAT THE REMOVABLE COVER EXTENDS ABOVE THE FINISHED GRADE LINE. THE GRADE SHOULD SLOPE AWAY FROM THE UNIT. THE DIAMETER OF THE HOLE MUST BE LARGE ENOUGH TO ALLOW FOR A CONCRETE ANCHOR. PLACE THE UNIT ON A BED OF GRAVEL, NATURALLY ROUNDED AGGREGATE, CLEAN AND FREE FLOWING, WITH PARTICLES NOT LESS THAN 1/8" OR MORE THAN 3/4" IN DIAMETER. THE CONCRETE ANCHOR IS NOT OPTIONAL.

THE UNIT SHOULD BE LEVELED AND THE WET WELL FILLED WITH WATER TO THE BOTTOM OF THE INLET TO HELP PREVENT THE UNIT FROM SHIFTING WHILE THE CONCRETE IS BEING POURED. THE CONCRETE MUST BE VIBRATED TO ENSURE THERE ARE NO VOIDS. IF IT IS NECESSARY TO POUR THE CONCRETE TO A HIGHER LEVEL THEN THE INLET, THE INLET MUST BE SLEEVED WITH AN 8" TUBE BEFORE POURING.

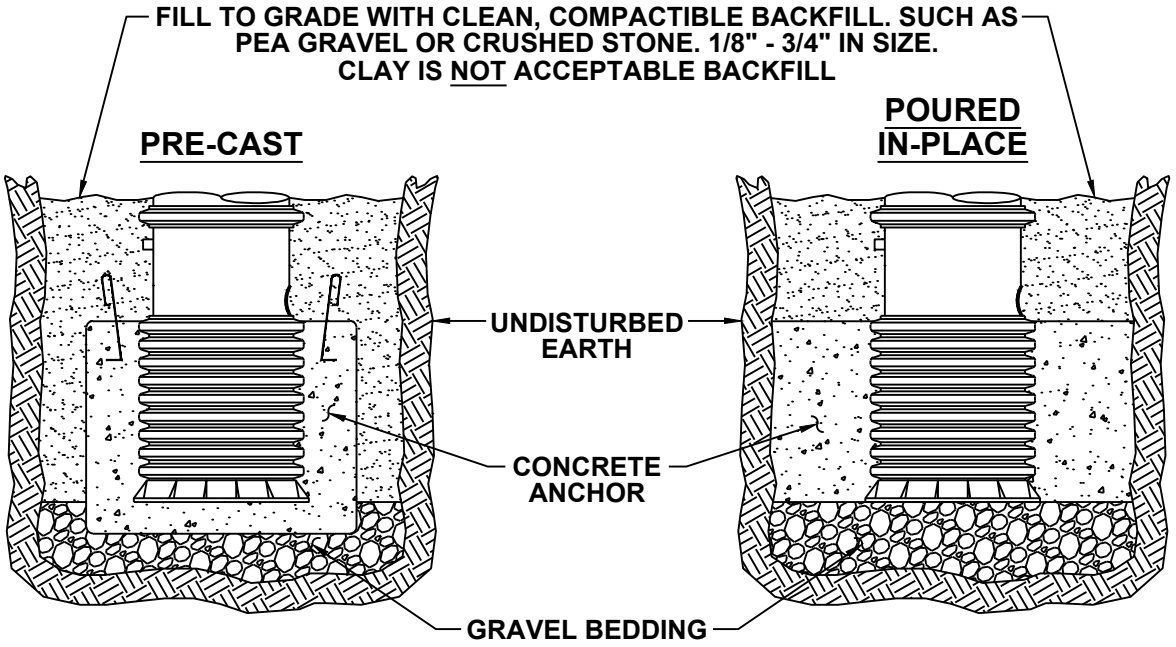

TYPICAL IN-GROUND SECTION VIEW

MOON TOWNSHIP MUNICIPAL AUTHORITY ALLEGHENY COUNTY PENNSYLVANIA		GRINDER PUMP (OUTSIDE TANK INSTALLATION)
Not to scale	April 2016	Standard Detail SD-033A

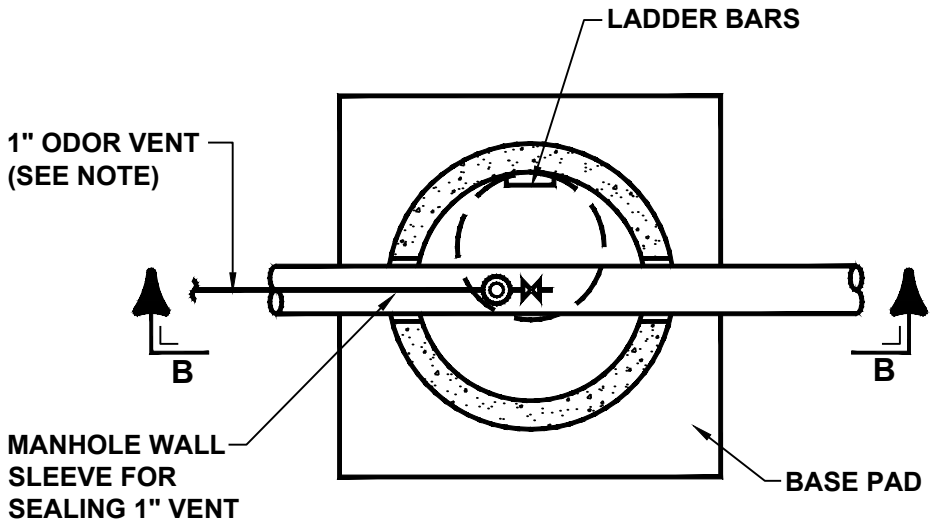

PLAN A

* TYPE OF VALVE INSTALLED IN THE MANHOLE AS REQUIRED BY THE ENGINEER

1) AIR RELEASE VALVE
2) AIR VACUUM VALVE
3) COMBINATION AIR VALVE AS SPECIFIED

NOTE:
ODOR VENT FROM AIR VALVE TO BE RUN INTO TRENCH WITH 20' PERFORATED PIPE ENCASED IN MIN. OF 12" 2B STONE.

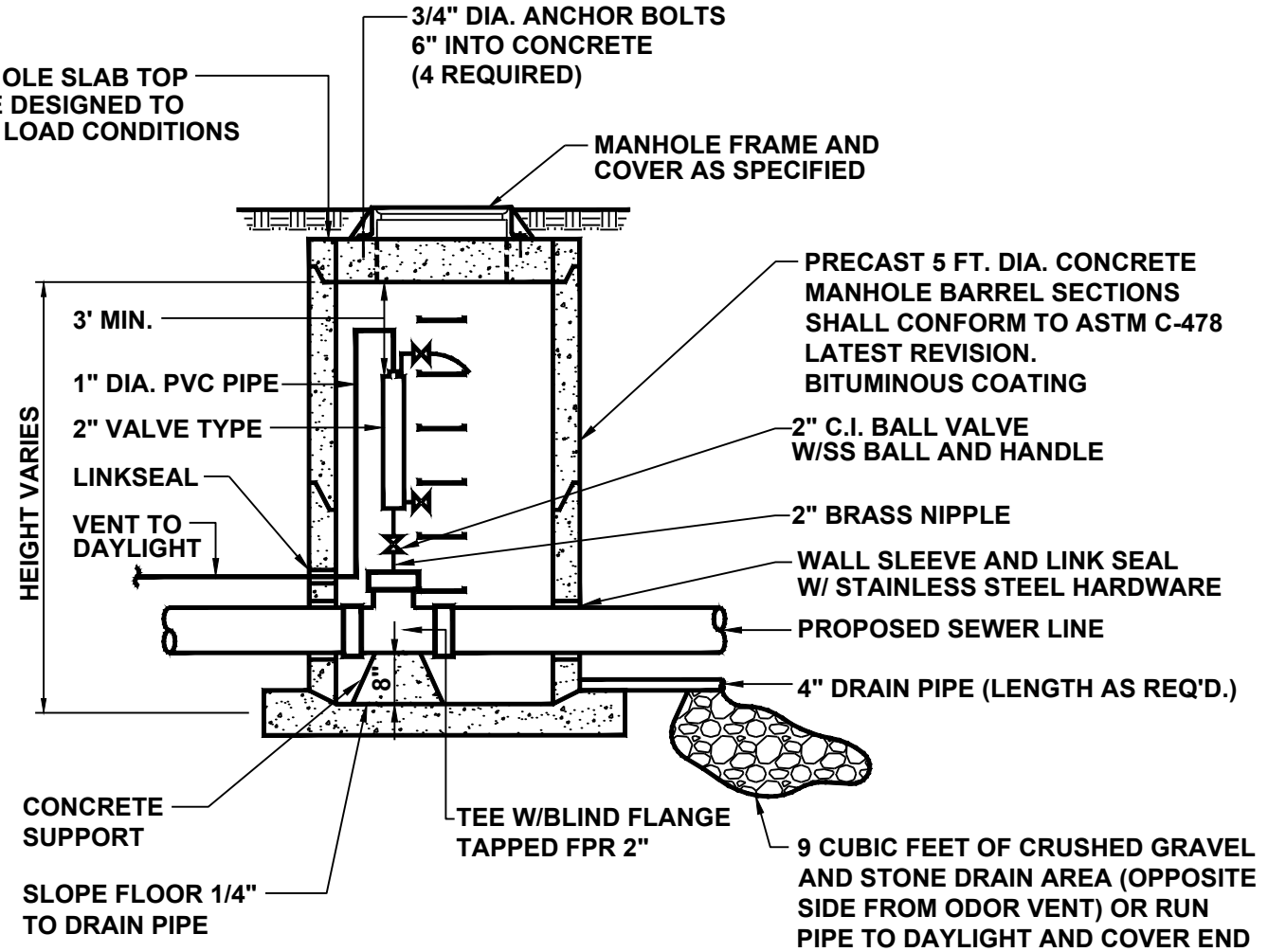

SECTION B

MOON TOWNSHIP MUNICIPAL AUTHORITY ALLEGHENY COUNTY PENNSYLVANIA		SEWAGE AIR AND VACUUM RELEASE VALVE AND MANHOLE
Not to scale	April 2016	Standard Detail SD-034

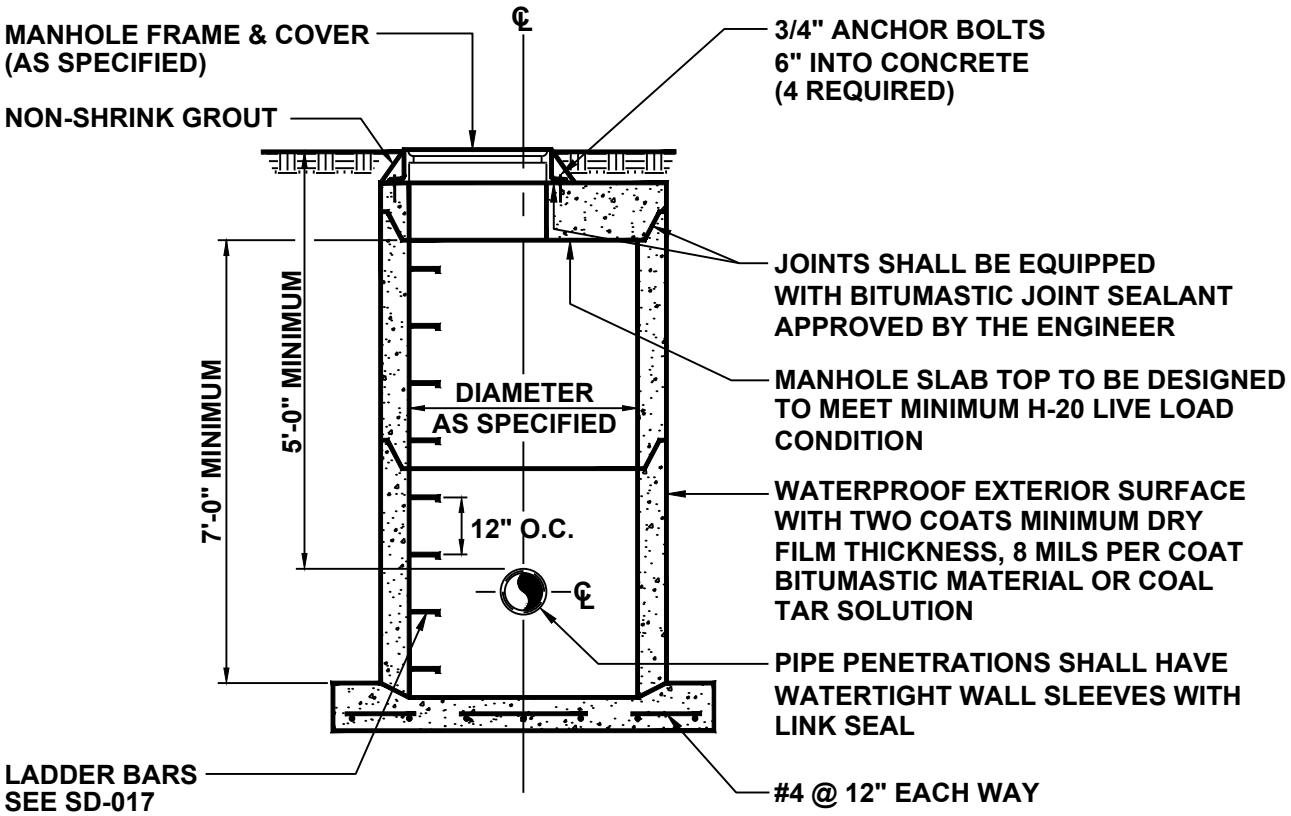

SECTION A-A

NOTES:

1. PRECAST CONCRETE MANHOLE SECTIONS SHALL CONFORM TO ASTM-C478, LATEST REVISION.
2. WHERE MANHOLE FOUNDATION IS IN ROCK, REINFORCEMENT WILL NOT BE REQUIRED.
3. LIFTING HOLES SHALL BE PAINTED WITH MORTAR, MADE WATERTIGHT AND LEFT NEAT & SMOOTH.
4. SUPPORT MANHOLE STRUCTURE AND ALL PIPING CONNECTIONS ON A MINIMUM OF 6" THICKNESS 1B BEDDING MATERIAL. ENCAPSILATE ALL PIPES WITHIN MANHOLE EXCAVATION IN THE SAME MATERIAL TO AN ELEVATION OF 12" ABOVE THE TOPS OF PIPES.

MOON TOWNSHIP MUNICIPAL AUTHORITY ALLEGHENY COUNTY PENNSYLVANIA		PRECAST CONCRETE MANHOLE VAULT
Not to scale	April 2016	Standard Detail SD-035

NOT USED

MOON TOWNSHIP MUNICIPAL AUTHORITY ALLEGHENY COUNTY PENNSYLVANIA		
Not to scale	April 2016	Standard Detail SD-036

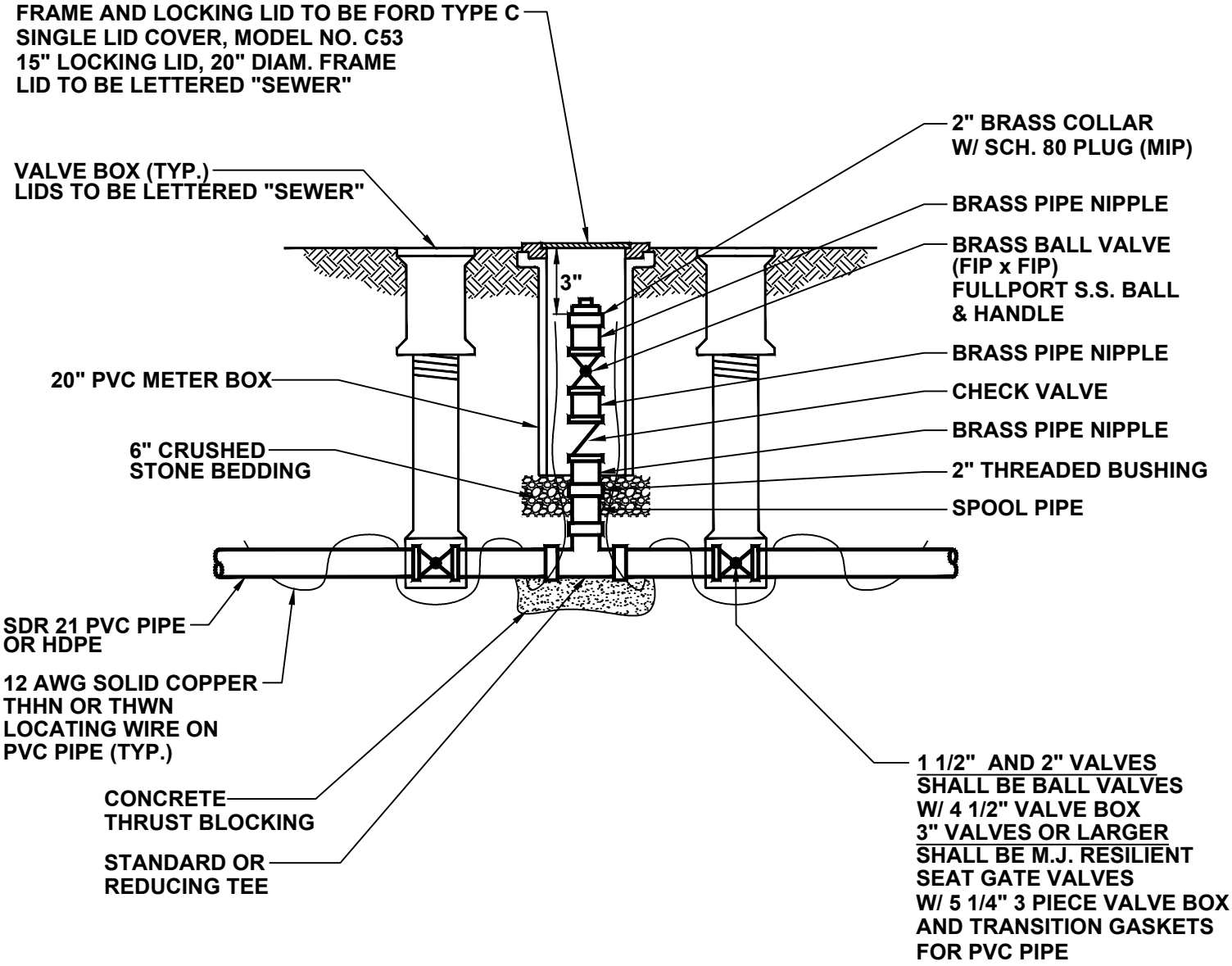

IN - LINE FLUSHING CONNECTION

1. SCH. 80 PVC REDUCING TEE (SOCKET x SOCKET) OR STANDARD TEE WITH REDUCING BUSHING (SLIP x SOCKET) AS REQUIRED
2. 1 1/2" SCH. 80 PVC PIPE WITH NEOPRENE INSULATION
3. 1 1/2" SCH. 80 PVC ADAPTOR (SOCKET x M.P.T.)
4. 1 1/2" BRASS BALL VALVE - FULL PORT WITH S.S. BALL AND HANDLE
5. 1 1/2" x 3" BRASS NIPPLE
6. BRASS COLLAR
7. SCH. 80 PVC PLUG (M.I.P.)

MOON TOWNSHIP MUNICIPAL AUTHORITY ALLEGHENY COUNTY PENNSYLVANIA		PRESSURE SEWER IN-LINE FLUSHING CONNECTION
Not to scale	April 2016	Standard Detail SD-037

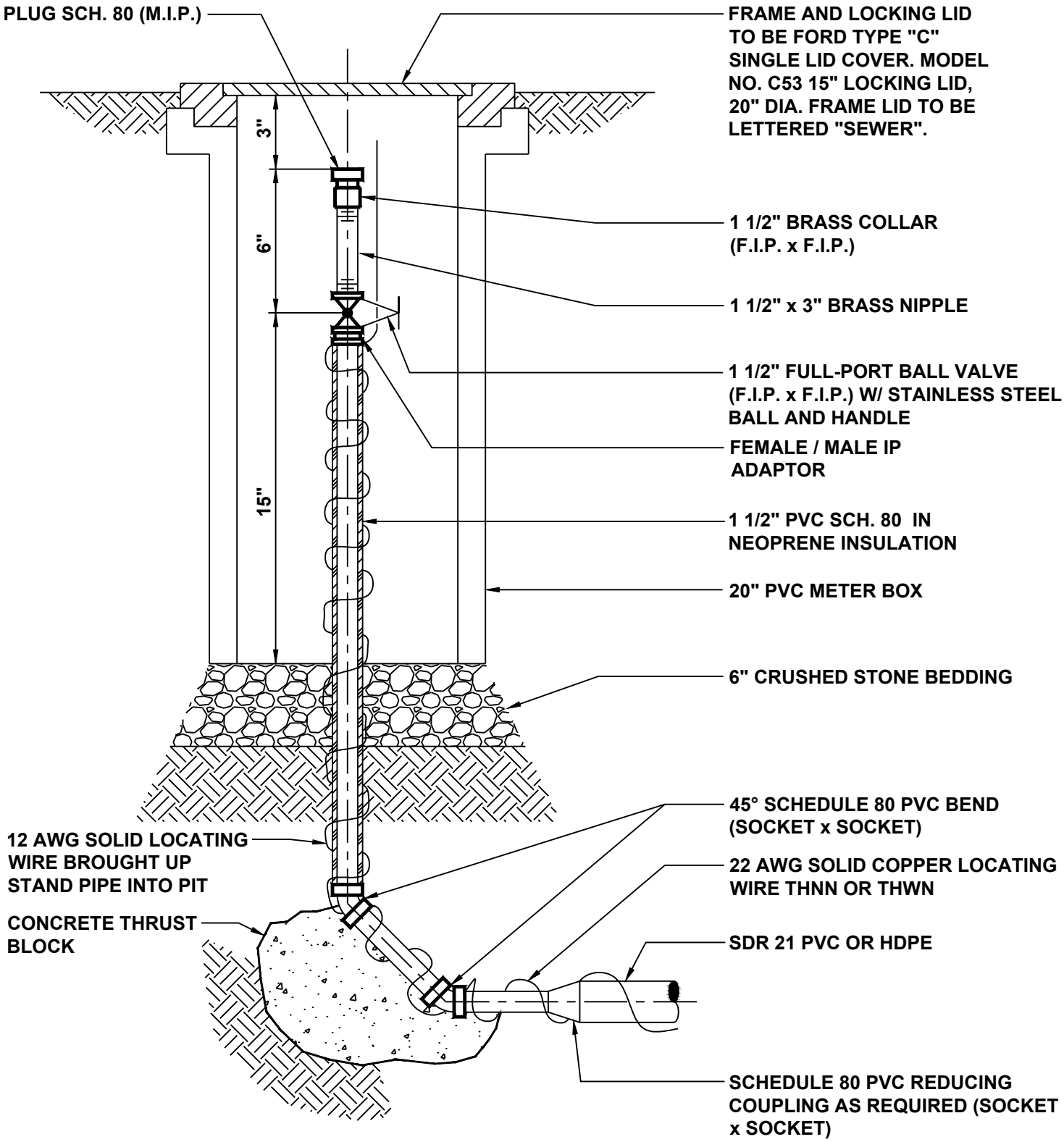

TERMINAL FLUSHING CONNECTION

MOON TOWNSHIP MUNICIPAL AUTHORITY ALLEGHENY COUNTY PENNSYLVANIA		CONSTRUCTION STANDARD PRESSURE SEWER TERMINAL FLUSHING CONNECTION
Not to scale	April 2016	Standard Detail SD-038

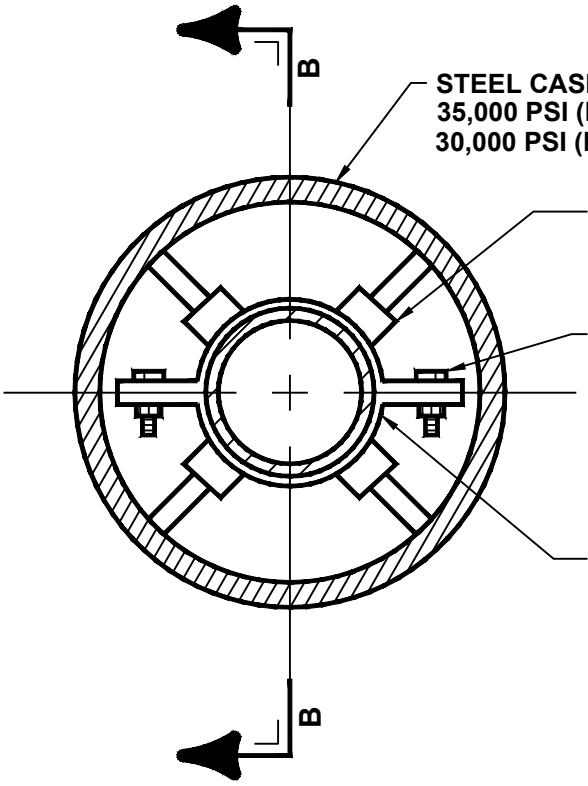

STEEL CASING PIPE ASTM A 53
35,000 PSI (MIN) FOR RR CROSSINGS
30,000 PSI (MIN) FOR HWY CROSSINGS

CASING SPACERS- MUST PROVIDE ELECTRICAL TRANSMISSION INSULATION BETWEEN CASING PIPE AND CARRIER PIPE

STAINLESS STEEL STUD WASHERS & HEX NUTS

D.I.P. CARRIER PIPE WITH FIELD LOK GASKETS.

NOTE:
CASING TO BE BORED TO CLEAR PAVING BY 3' MIN.

SECTIONAL PLAN A

WALL THICKNESS OF CASING PIPE

DIAMETER (IN.)	THICKNESS (IN.)
UP TO 16"	1/4"
18" TO 24"	3/8"
26" TO 34"	1/2"
36" TO 42"	5/8"

MANUFACTURER RECOMMENDS
10' MAX. SPACING W / END SPACERS
2' FROM END OF CASING OR AS
DIRECTED BY SPACER MANUFACTURER
TO SUPPORT CARRIER PIPE MATERIAL

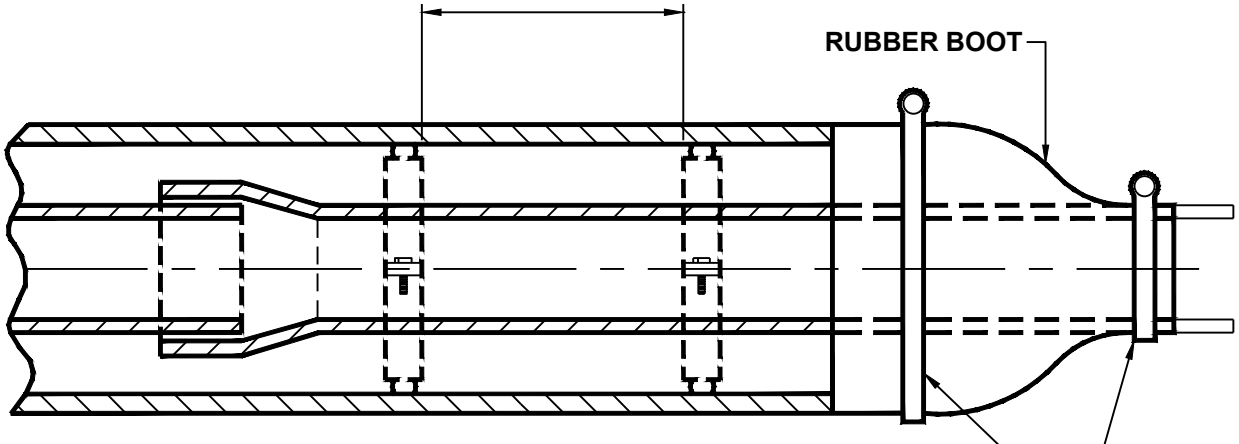

PIPELINE CASING SPACERS SHALL
BE CASCADE WATERWORKS MFG. CO.
OR APPROVED EQUAL.

SECTION B

MOON TOWNSHIP MUNICIPAL AUTHORITY ALLEGHENY COUNTY PENNSYLVANIA		STEEL CASING AND D.I. CARRIER PIPES INSTALLED BY BORING
Not to scale	April 2016	Standard Detail SD-039

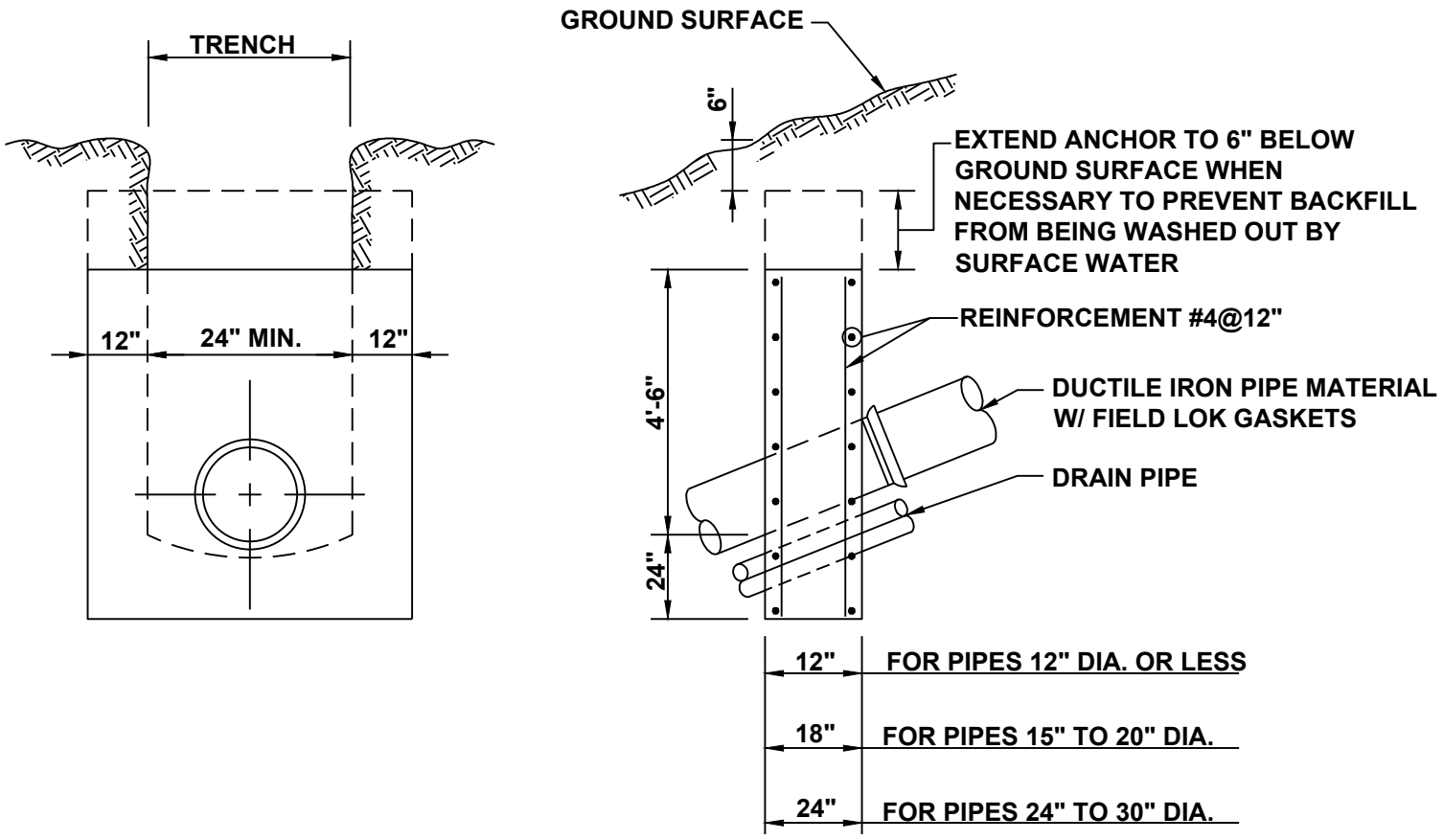

CONCRETE ANCHORS FOR PIPES ON STEEP GRADES

PROVIDE NO ANCHORS ON GRADES LESS THAN 20% UNLESS NOTED
PROVIDE ANCHORS 36' O/C ON GRADES BETWEEN 20% AND 34%
PROVIDE ANCHORS 18' O/C ON GRADES BETWEEN 34% AND 50%
PROVIDE ANCHORS 9' O/C ON GRADES BETWEEN 50% AND 70%

FOR CONDITIONS OTHER THAN SHOWN HEREON ANCHORS SHALL BE PROVIDED AS REQUIRED BY THE CONTRACT PLANS OR ORDERED IN THE FIELD BY THE AUTHORITY'S REPRESENTATIVE.

MOON TOWNSHIP MUNICIPAL AUTHORITY ALLEGHENY COUNTY PENNSYLVANIA		CONCRETE ANCHORS FOR PIPELINES
Not to scale	April 2016	Standard Detail SD-040

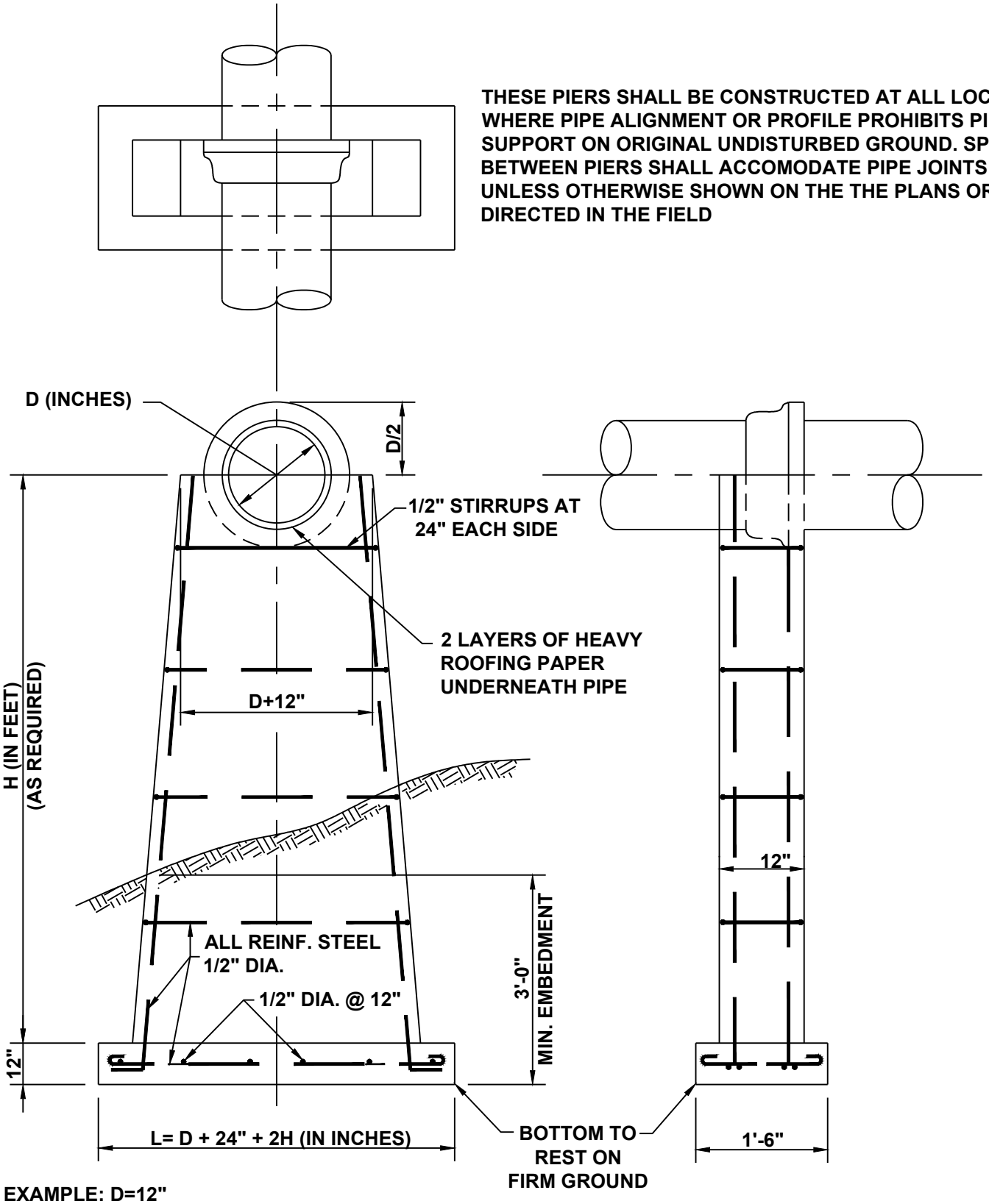

THESE PIERS SHALL BE CONSTRUCTED AT ALL LOCATIONS WHERE PIPE ALIGNMENT OR PROFILE PROHIBITS PIPE SUPPORT ON ORIGINAL UNDISTURBED GROUND. SPACING BETWEEN PIERS SHALL ACCOMODATE PIPE JOINTS UNLESS OTHERWISE SHOWN ON THE THE PLANS OR DIRECTED IN THE FIELD

EXAMPLE: D=12"
H=10'-0"
L=12"+24"+(2X10)=56"

MOON TOWNSHIP MUNICIPAL AUTHORITY ALLEGHENY COUNTY PENNSYLVANIA		PIPE SUPPORT PIERS FOR ALIGNMENTS ABOVE ORIGINAL UNDISTURBED GROUND
Not to scale	April 2016	Standard Detail SD-041

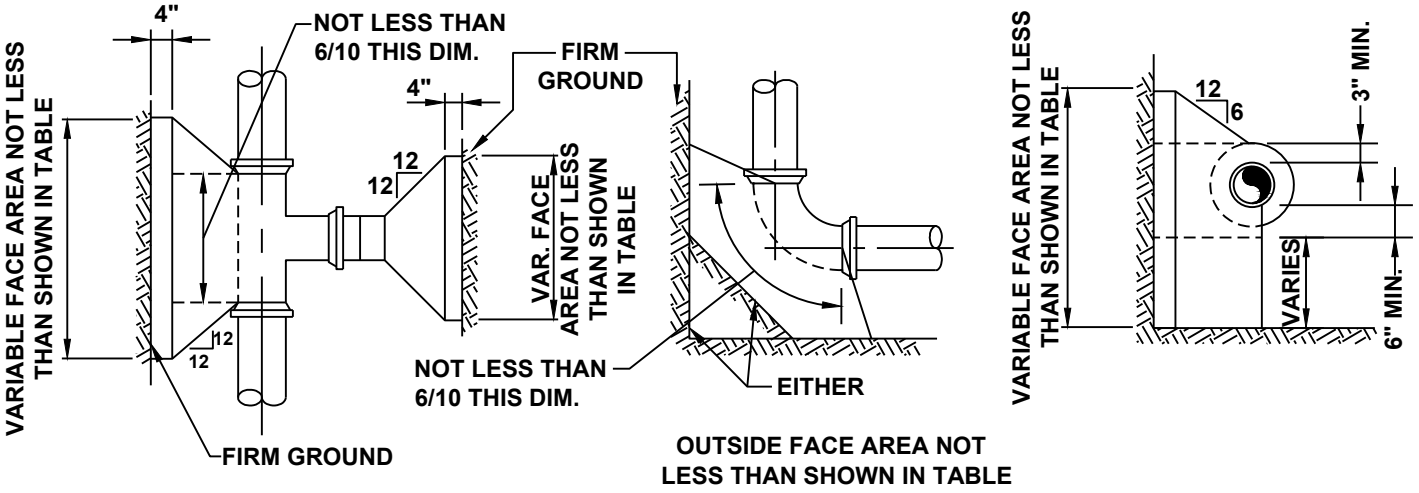

TEES AND PLUGS **BENDS** **TEES, WYES, AND BENDS**

NOTES:

1. ALL TEES, WYES, CROSSES, PLUGS AND BENDS OF 10° OR MORE SHALL BE BLOCKED AGAINST FIRM EARTH WITH CONCRETE.
2. EARTH PRESSURE FIGURED AT 4000 PSF. IF EARTH ENCOUNTERED WILL NOT WITHSTAND THIS PRESSURE, THE AREA OF THE BLOCK MUST BE INCREASED PROPORTIONATELY.

			AREA OF BLOCK IN SQUARE FEET				
PIPE SIZE (in)	AREA* (sq in)	TOTAL FORCE (lbs)	TEES & PLUGS	90 DEGREE BENDS	45 DEGREE BENDS	22 1/2 DEGREE BENDS	11 1/4 DEGREE BENDS
4	19	4275	1.1	1.5	1.0	1.0	1.0
6	38	8550	2.2	3.0	1.6	1.0	1.0
8	65	14625	3.7	5.2	2.8	1.4	1.0
10	97	21825	5.5	7.7	4.2	2.1	1.1
12	137	30825	7.7	10.9	5.9	3.0	1.5
14	184	41400	10.4	14.6	7.9	4.0	2.1
16	238	53550	13.4	18.9	10.3	5.2	2.7
18	299	67275	16.8	23.8	12.9	6.6	3.4
20	367	82575	20.7	29.2	15.8	8.1	4.1
24	523	117675	29.4	41.6	22.5	11.5	5.9
30	805	96600	24.2	34.2	18.5	9.4	4.8
36	1152	138240	34.6	48.9	26.5	13.5	6.9

CALCULATIONS ARE BASED ON 225 PSI PRESSURE OR 150 PSI WORKING PRESSURE PLUS 50% INCREASE FOR WATER HAMMER FOR SIZES 4" TO 24" INCLUSIVE. FOR SIZES 30" & 36" THE TABLE IS BASED ON 120 PSI PRESSURE OR 75 PSI WORKING PRESSURE PLUS 50% WATER HAMMER.

MOON TOWNSHIP MUNICIPAL AUTHORITY ALLEGHENY COUNTY PENNSYLVANIA		CONCRETE THRUST BLOCKING
Not to scale	April 2016	Standard Detail SD-042

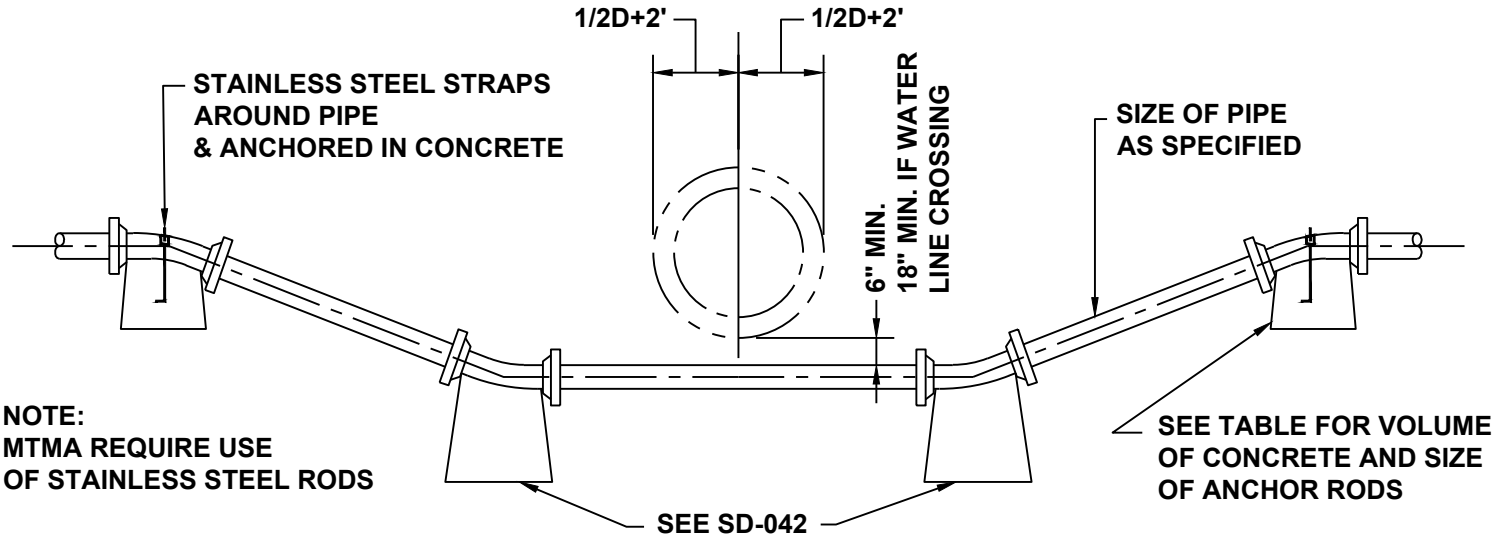

NOTE: THE TABLE IS BASED ON 225 PSI TEST PRESSURE. ALL BLOCKS HAVING LENGTH OF 3'-0" OR MORE TO BE REINFORCED WITH #4 @ 6" PLACED 3" FROM TOP OF BLOCK.

		VOLUME IN CUBIC FEET			SIZE AND NO. OF ANCHOR RODS		
PIPE SIZE	TOTAL FORCE (lbs)	45 DEGREE BENDS	22 1/2 DEGREE BENDS	11 1/4 DEGREE BENDS	45 DEGREE BENDS	22 1/2 DEGREE BENDS	11 1/4 DEGREE BENDS
4	4275	22.7	11.6	5.9	1-#4	1-#4	1-#4
6	8550	45.5	23.3	11.9	2-#4	1-#4	1-#4
8	14625	77.8	39.6	20.3	2-#4	2-#4	1-#4
10	21825	116.1	59.1	30.3	2-#4	2-#4	2-#4
12	30825	164.0	83.5	42.8	2-#5	2-#4	2-#4
14	41400	220.2	112.1	57.5	2-#6	2-#4	2-#4
16	53550	284.9	145.0	73.4	2-#7	2-#5	2-#4
18	67275	357.9	182.2	93.4	2-#7	2-#5	2-#4
20	82575	439.2	223.6	114.7	2-#8	2-#6	2-#4
24	117675	626.0	318.7	183.4	2-#9	2-#7	2-#5

MOON TOWNSHIP MUNICIPAL AUTHORITY ALLEGHENY COUNTY PENNSYLVANIA		CONCRETE ANCHORS AND METHOD OF LAYING MAINS UNDER OBSTRUCTIONS
Not to scale	April 2016	Standard Detail SD-043

SIZE OF PIPE	4", 6", 8"			10" & 12"			14" & 16"			18" & 20"			24"		
DEGREE BEND	22 1/2°	45°	90°	22 1/2°	45°	90°	22 1/2°	45°	90°	22 1/2°	45°	90°	22 1/2°	45°	90°
R = O.R.+	1/2"	1/2"	1/2"	1/2"	1/2"	3/4"	1/2"	3/4"	3/4"	1/2"	3/4"	1"	1/2"	1"	1 1/2"
W	2"	2"	2"	2"	2 1/2"	3"	2"	3"	4"	3"	3 1/2"	4"	4"	4"	6"
T	1/2"	1/2"	1/2"	1/2"	1/2"	3/4"	1/2"	3/4"	3/4"	1/2"	3/4"	1"	1/2"	1"	1 1/2"
A	2"	2"	2"	2"	2 1/2"	3"	2"	3"	3 1/2"	2 1/2"	3 1/2"	3 3/4"	3 1/2"	3 3/4"	4"
D.B.	3/4"	3/4"	3/4"	3/4"	1"	1 1/8"	3/4"	1 1/8"	1 1/2"	1"	1 3/8"	1 7/8"	1 1/4"	1 5/8"	2 1/8"
D.R.	6"	6"	6"	6"	8"	10"	6"	10"	10"	8"	10"	10"	10"	10"	10"

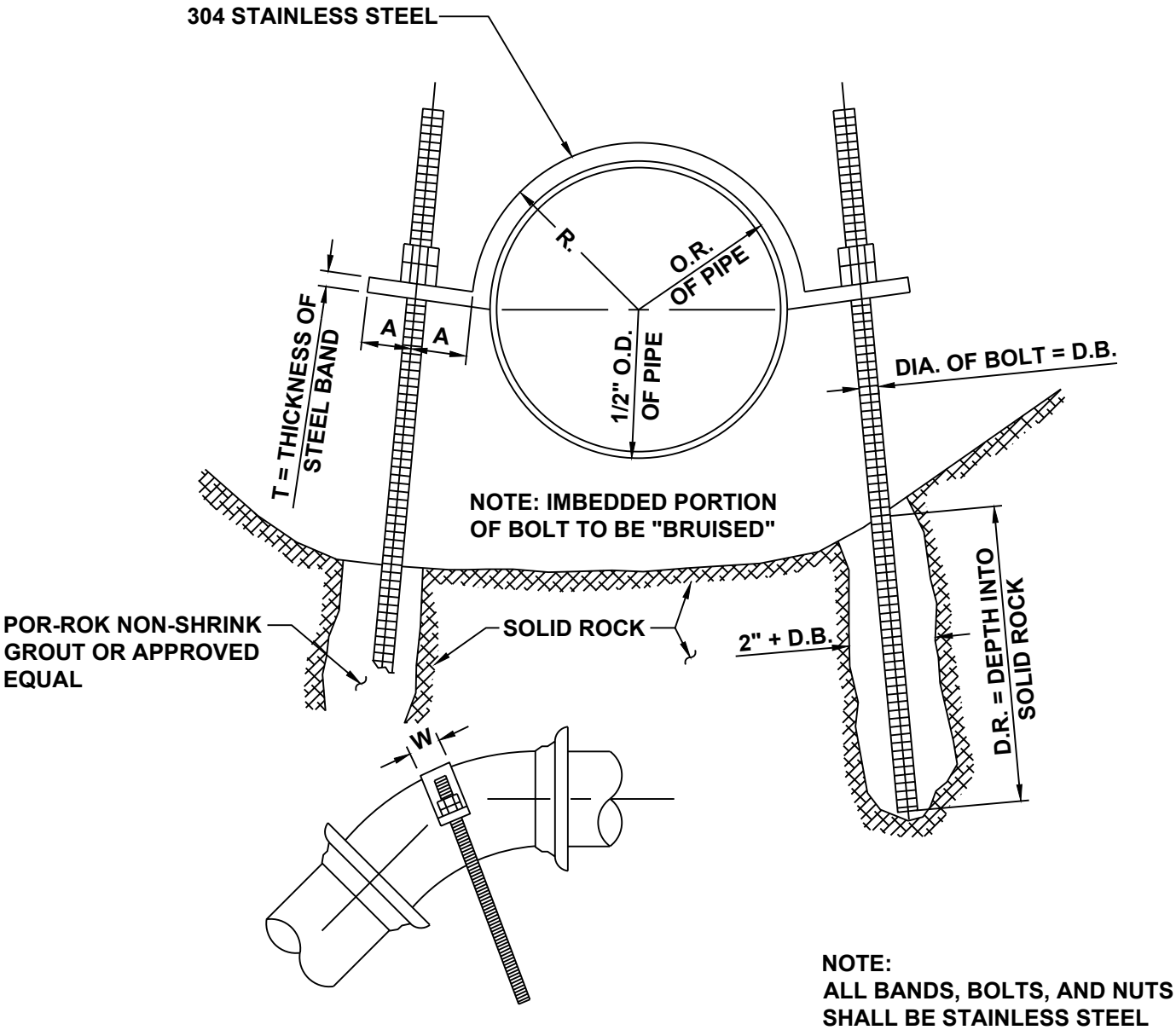

NOTE:
ALL BANDS, BOLTS, AND NUTS SHALL BE STAINLESS STEEL

MOON TOWNSHIP MUNICIPAL AUTHORITY ALLEGHENY COUNTY PENNSYLVANIA		STANDARD METHOD TO ANCHOR BENDS INTO SOLID ROCK
Not to scale	April 2016	Standard Detail SD-044

SIZE OF PIPE	4", 6", 8"			10" & 12"			14" & 16"			18" & 20"			24"		
DEGREE BEND	22 1/2°	45°	90°	22 1/2°	45°	90°	22 1/2°	45°	90°	22 1/2°	45°	90°	22 1/2°	45°	90°
R = O.R.+	1/2"	1/2"	1/2"	1/2"	1/2"	3/4"	1/2"	3/4"	3/4"	1/2"	3/4"	1"	1/2"	1"	1 1/2"
W	2"	2"	2"	2"	2 1/2"	3"	2"	3"	4"	3"	3 1/2"	4"	4"	4"	6"
T	1/2"	1/2"	1/2"	1/2"	1/2"	3/4"	1/2"	3/4"	3/4"	1/2"	3/4"	1"	1/2"	1"	1 1/2"
A	2"	2"	2"	2"	2 1/2"	3"	2"	3"	3 1/2"	2 1/2"	3 1/2"	3 3/4"	3 1/2"	3 3/4"	4"
D.B.	3/4"	3/4"	3/4"	3/4"	1"	1 1/8"	3/4"	1 1/8"	1 1/2"	1"	1 3/8"	1 7/8"	1 1/4"	1 5/8"	2 1/4"

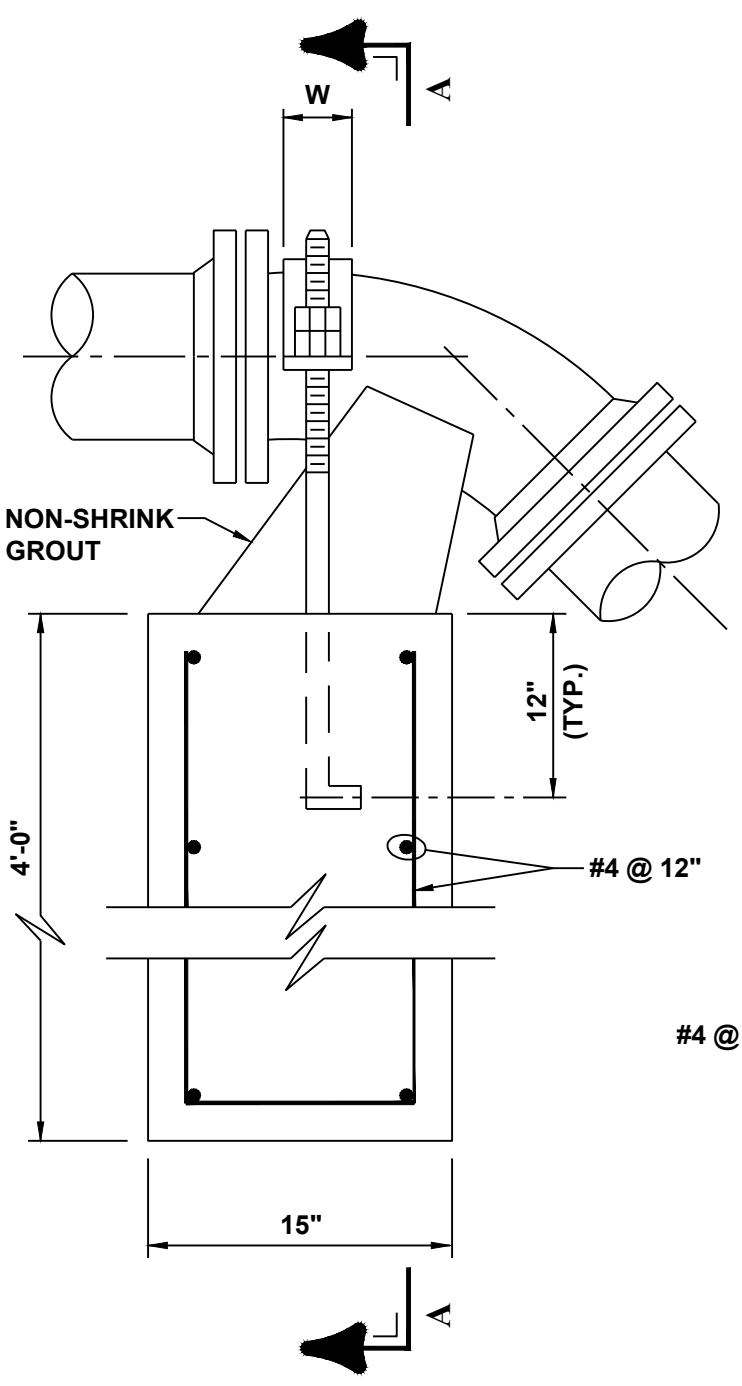

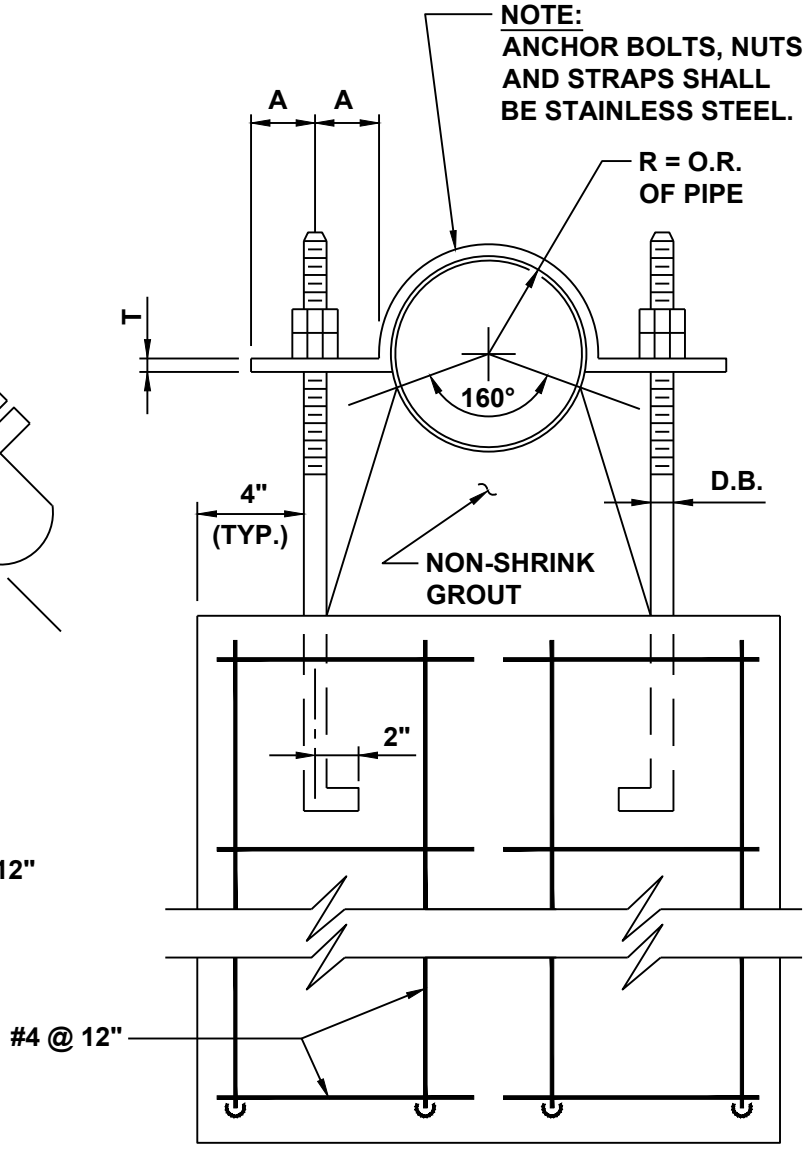

SECTION A-A

MOON TOWNSHIP MUNICIPAL AUTHORITY ALLEGHENY COUNTY PENNSYLVANIA		STANDARD METHOD OF ANCHORING VERTICAL BENDS
Not to scale	April 2016	Standard Detail SD-045

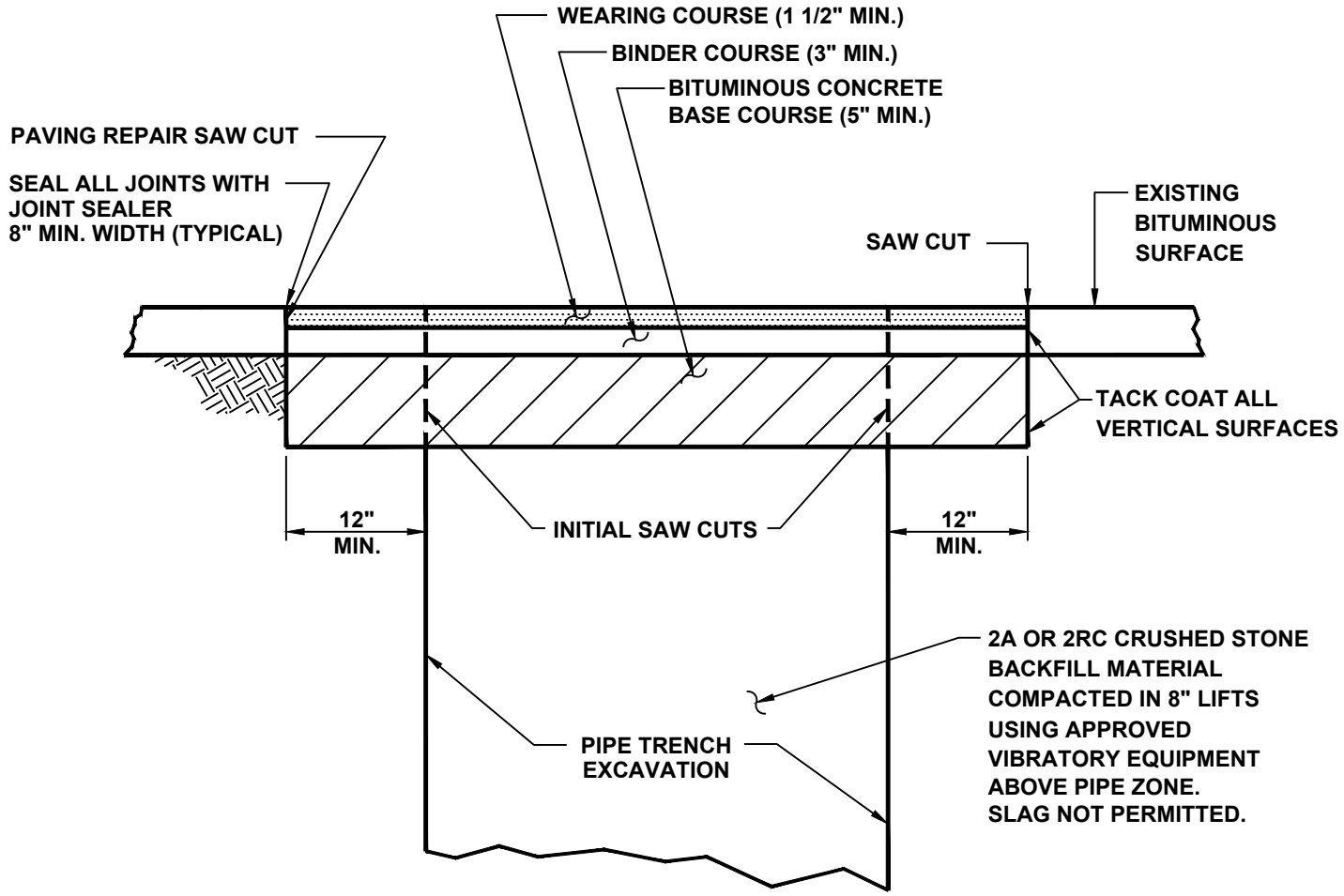

WEARING COURSE:	SUPERPAVE HWA IN ACCORDANCE WITH PA DOT SPECIFICATIONS. DEPTH EQUAL TO OR GREATER OF EXISTING OR 1 1/2" MIN. AFTER COMPACTION
BINDER COURSE:	SUPERPAVE HWA IN ACCORDANCE WITH PA DOT SPECIFICATIONS. DEPTH EQUAL TO OR GREATER OF EXISTING OR 3" MIN. AFTER COMPACTION
BASE COURSE:	SUPERPAVE HWA IN ACCORDANCE WITH PA DOT SPECIFICATIONS. DEPTH EQUAL TO OR GREATER OF EXISTING OR 5" MIN. AFTER COMPACTION
TACK COAT:	SEC. 401.3(f) OF PUB. 408 LATEST EDITION.

NOTES:

1. 2 SEPARATE SAW CUTS. INITIAL SAW CUT FOR TRENCH EXCAVATION, PAVING REPAIR SAW CUT FOR PAVING RESTORATION.
2. DURING COLD WEATHER MONTHS, PROVIDE AND MAINTAIN A TEMPORARY BITUMINOUS COLD PATCH SURFACE UNTIL WEATHER PERMITS BITUMINOUS PAVING.
3. NOTIFY MOON TOWNSHIP PUBLIC WORKS DIRECTOR MIN. 24 HOURS IN ADVANCE OF EXCAVATION AND RESTORATION.
4. SLAG IS NOT PERMITTED AS BACKFILL.
5. 100% STONE BACKFILL IS REQUIRED FULL WIDTH OF RIGHT-OF-WAY.
6. TEMPORARY PIPE BACKFILL USING EXCAVATED MATERIAL IS NOT PERMITTED. MUST BE BACKFILLED WITH SUITABLE STONE AS PER NOTE 5 ABOVE IMMEDIATELY.

MOON TOWNSHIP MUNICIPAL AUTHORITY ALLEGHENY COUNTY PENNSYLVANIA		RESTORATION OF MOON TOWNSHIP FLEXIBLE BASE PAVEMENT STREETS AND ROADS
Not to scale	April 2016	Standard Detail SD-046

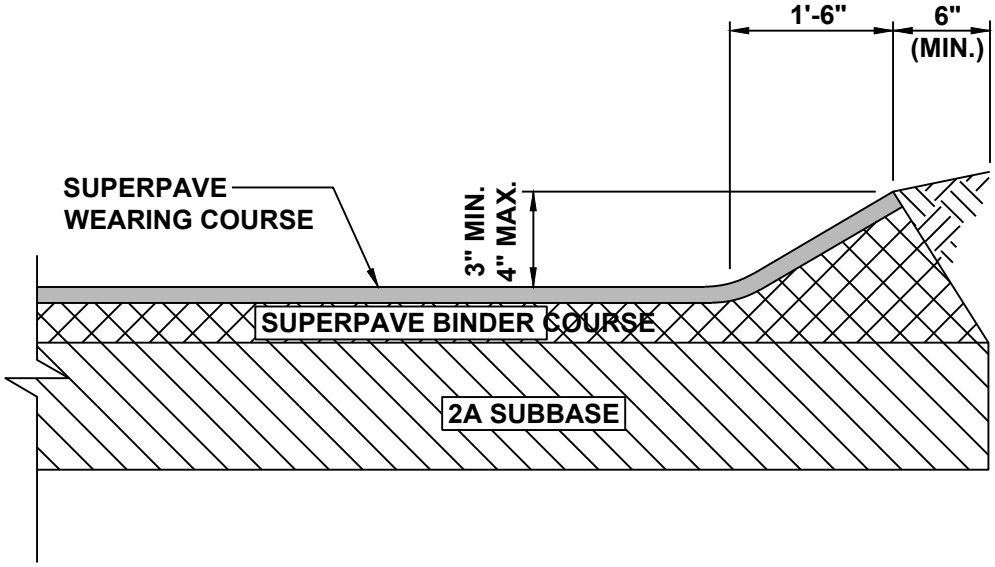

MOON TOWNSHIP MUNICIPAL AUTHORITY ALLEGHENY COUNTY PENNSYLVANIA		TYPICAL BITUMINOUS ASPHALT WEDGE CURB
Not to scale	April 2016	Standard Detail SD-047

Not to scale	MOON TOWNSHIP MUNICIPAL AUTHORITY ALLEGHENY COUNTY PENNSYLVANIA	
April 2016		
Standard Detail SD-048		TYPICAL UTILITY LOCATIONS

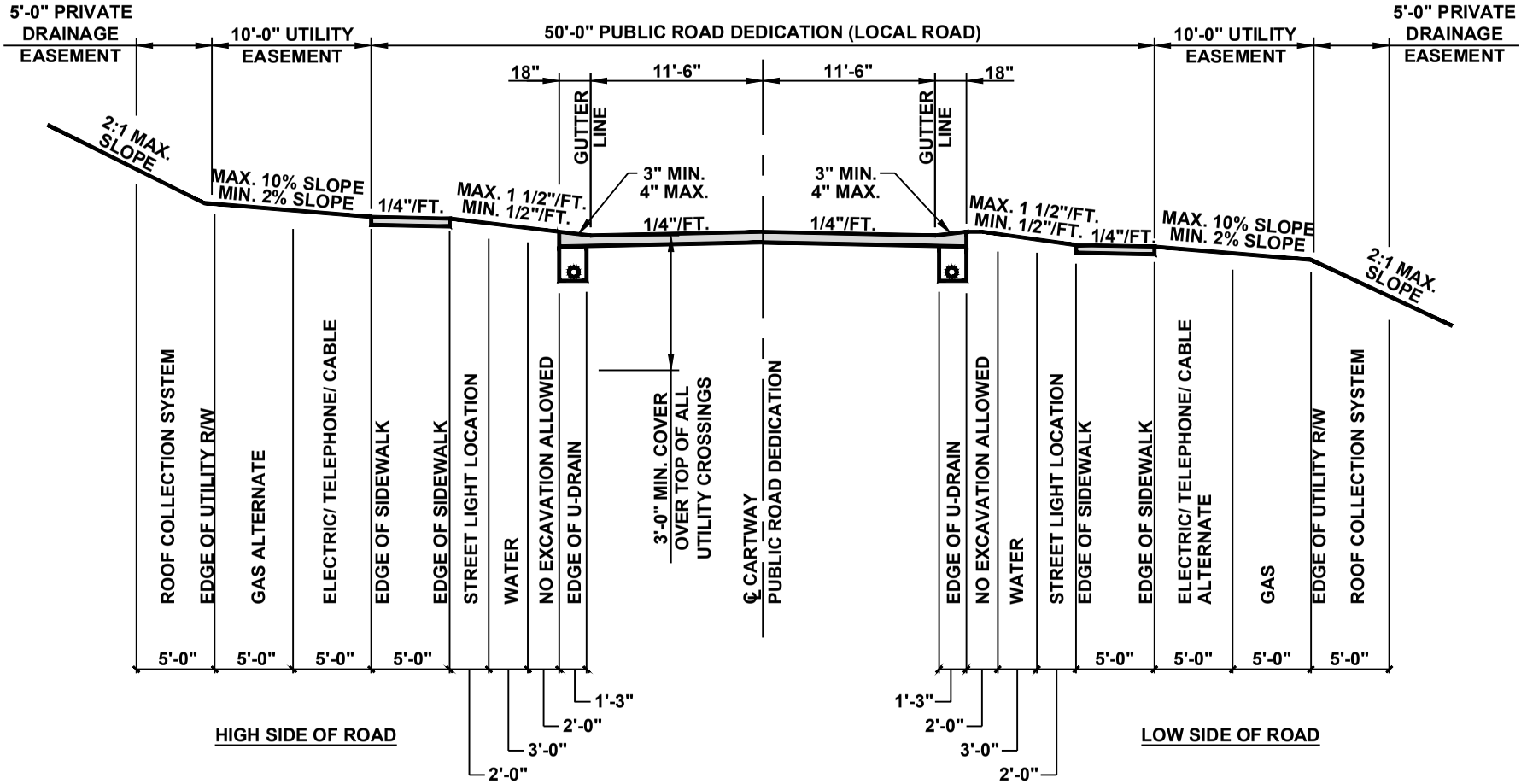

NOTES:

1. THESE LOCATIONS ARE TYPICAL FOR STRAIGHT AWAY- SITE AND/ OR EXISTING CONDITIONS AT TIME OF INSTALLATION MAY WARRANT CHANGES. ANY CHANGES MUST BE INDICATED ON SPECIFIC CONSTRUCTION DOCUMENTS WITH PRIOR APPROVAL OF TOWNSHIP ENGINEER IN WRITING. SUBMIT CROSS-SECTION SHOWING LOCATIONS FOR APPROVAL.
2. UNDERDRAIN SHALL BE INSTALLED ON BOTH SIDES IN ALL CASES.
3. THE DEVELOPER SHALL INDICATE UNDERDRAIN LOCATIONS ON THE PLANS.
4. SLAG IS NOT PERMITTED AS BACKFILL.
5. 100% STONE BACKFILL IS REQUIRED FULL WIDTH OF RIGHT-OF-WAY.
6. IN SETTING MAIL BOX POST, DO NOT DAMAGE FRENCH DRAIN. SET BOTTOM OF POST A MAXIMUM OF 20" BELOW CURB. DO NOT PERMIT CONCRETE COLLAR TO EXCEED 12" BELOW TOP OF CURB. MAIL BOX SHALL BE MAXIMUM 4"x4" WOOD POST (OR TOWNSHIP APPROVED EQUAL). BRICK OR CONCRETE PILLARS ARE NOT PERMITTED.
7. SANITARY SEWER LOCATION TO BE DETERMINED DURING APPROVAL PROCESS.
8. ALL UTILITY CROSSINGS MUST BE MADE PERPENDICULAR TO THE ROAD CARTWAY.
9. ALL UTILITY LINES MUST BE STAKED IN THE FIELD AND REVIEWED BY THE TOWNSHIP PRIOR TO THE INSTALLATION OF THE UTILITY.
10. UTILITY LOCATIONS SHALL BE IN ACCORDANCE WITH CURRENT TOWNSHIP SPECIFICATIONS, OR AS AMENDED.

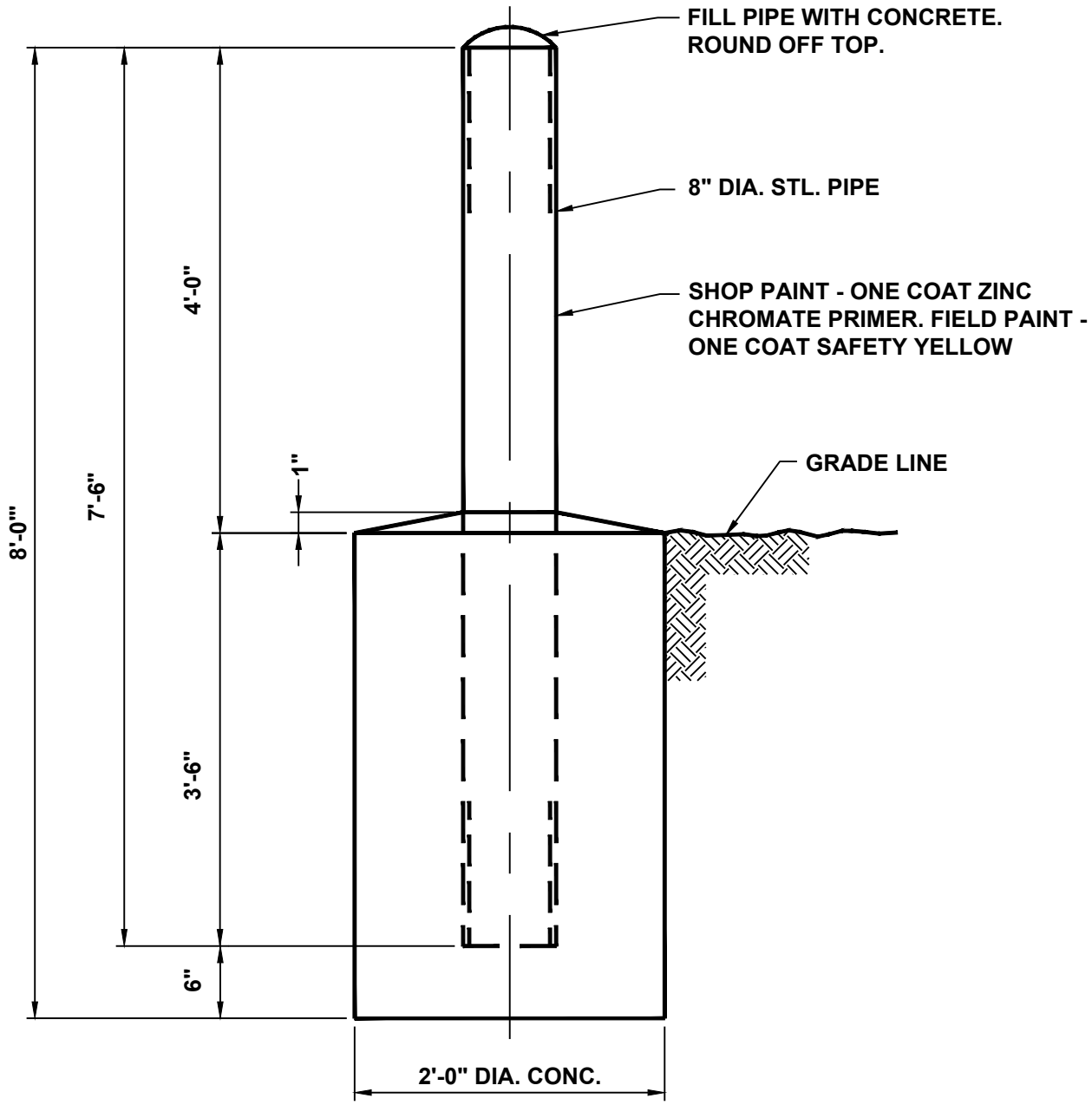

NOTE:
DO NOT USE FORMS. POUR AGAINST UNDISTURBED EARTH.

MOON TOWNSHIP MUNICIPAL AUTHORITY ALLEGHENY COUNTY PENNSYLVANIA		GUARD POST
Not to scale	April 2016	Standard Detail SD-049